AGENDA
PLANNING COMMISSION
REGULAR MEETING
3:30 p.m. Tuesday, May 19, 2020
City Council Chambers, 2nd Floor of City Hall
823 Rosenberg, Galveston, Texas

In order to advance the public health goal of limiting face-to-face meetings (also called "social distancing") to slow the spread of the Coronavirus (COVID-19), the meeting will be held by videoconference and there will be no public access to the location described above.

Public Comment can be submitted on-line: https://forms.galvestontx.gov/Forms/PublicComment or by calling 409-797-3665.

1. Call Meeting To Order
2. Attendance
3. Conflict Of Interest
4. Approval Of Minutes: May 5, 2020

   Documents:

   2020-05-05 PC MINUTES.PDF

5. COVID-19 Update (Staff)
6. Meeting Format (Staff)
7. Public Comment

   Members of the public may submit a public comment using the web link below. All comments submitted prior to the meeting will be provided to the Planning Commission.

   HTTPS://FORMS.GALVESTONTX.GOV/FORMS/PUBLICCOMMENT

   a. Agenda Items
   b. Non-Agenda Items

8. New Business And Associated Public Hearings

   A. 20P-015 (18227 E De Vaca) Request For A Beachfront Construction Certificate/Dune Protection Permit In Order To Construct A Single-Family Dwelling, Driveway, And Dune Walkover. The Property Is Legally Described As Lot 60 (61-1), Indian Beach, Section 4, A Subdivision In The City And County Of Galveston, Texas. Applicant: Blake Moak Property Owner: Blake And Jillian Moak

      Documents:

      20P-015 - STAFF REPORT - FINAL - AMENDED.PDF

   B. 20P-017 (24131 San Luis Road/FM 3005) Request For A Beachfront Construction Certificate/Dune Protection Permit In Order To Construct A Single-Family Dwelling,

Driveway, And Dune Walkover. The Property Is Legally Described As Sur Tract 19, A Subdivision In The City And County Of Galveston, Texas. Applicant: Kai Adkins Property Owner: Kai Adkins

Documents:

20P-017 - STAFF REPORT - FINAL.PDF

9. Discussion And Action Items

10. Adjournment

I certify that the above Notice of Meeting was posted in a place convenient to the public in compliance with Chapter 551 of the Texas Government Code on May 14, 2020 at 2:00 P.M.

Prepared by: Karen White, Planning Technician

IN ACCORDANCE WITH THE PROVISIONS OF THE AMERICANS WITH DISABILITIES ACT (ADA), PERSONS IN NEED OF A SPECIAL ACCOMMODATION TO PARTICIPATE IN THIS PROCEEDING SHALL, WITHIN THREE (3) DAYS PRIOR TO ANY PROCEEDING, CONTACT THE CITY SECRETARY'S OFFICE, SUITE 201, 823 ROSENBERG, GALVESTON, TX 77550 (409-797-3510)

MEMBERS OF CITY COUNCIL MAY BE ATTENDING AND PARTICIPATING IN THIS MEETING

City of Galveston

MINUTES OF THE PLANNING COMMISSION OF THE CITY OF GALVESTON
REGULAR MEETING – May 5, 2020

CALL MEETING TO ORDER

The meeting was called to order at 3:30 p.m.

ATTENDANCE

Members Present via Videoconference:	Jeff Antonelli, Cate Black, Lisa Blair, Bob Brown, Eugene Cook, Jeffrey Hill, Carol Hollaway, CM John Paul Listowski
Members Absent:	None
Staff Present:	Tim Tietjens, Development Services Director; Catherine Gorman, AICP, Assistant Director/HPO
Staff Present via Telephone:	Dustin Henry, AICP, Coastal Resource Manager; Karen White, Planning Technician; Donna Fairweather, Assistant City Attorney

CONFLICT OF INTEREST

None

APPROVAL OF MINUTES

The April 21, 2020 minutes were approved as presented.

COVID-19 UPDATE

Staff updated the Commission and the public on the City's steps to reduce the spread of COVID-19.

MEETING FORMAT

Staff explained the adjusted meeting format to the Commission and the public.

Eugene Cook arrived at 3:36 p.m.

PUBLIC COMMENT

None

OLD BUSINESS AND ASSOCIATED PUBLIC HEARINGS

19BF-086 - (Stewart Beach, 201 Seawall Blvd.) Request for a Beachfront Construction Certificate/Dune Protection Permit in order to conduct annual beach maintenance and to redistribute stockpiled sand. Property is legally described as follows: Abst 628 Page 141 & 142 M Menard Sur TR 59 7.909 Acrs; Abst 628 M B Menard Sur (241-0-0) Blk 241 Galveston; Abst 628 M B Menard Sur (242-0-0) Blks 242 & Pt of 243 Galveston; Abst 628 M B Menard Sur (242-0-0) Blks 242 & Pt of 243 Galveston; Abst 628 M B Menard Sur (183-0-0) Blk 183 Galveston; Abst 628 M B Menard Sur (182-0-0) Blk 182 Galveston; Abst 628 M B Menard Sur (181-0-0) Blk 181 Galveston; Abst 628 M B Menard Sur (121-0-0) Blk 121 Galveston; Abst 628 M B Menard Sur (122-0-0) Blk 122 Galveston; Abst 628 M B Menard Sur (123-0-0) Blk 123 Galveston, a subdivision in the City and County of Galveston, Texas.
Applicant: Galveston Park Board of Trustees c/o Rueben Trevino

Property Owner: City of Galveston

Staff presented the staff report.

Representatives of the applicant Sheryl Rozier and John Lee presented to the Commission.

Chairperson Cate Black called for questions or comments from the Commission.

Chairperson Cate Black made a motion to approve case 19BF-086 with staff's recommendations and the following changes:

- 2.g. ~~The seaward extent of the proposed dune restoration project on the beach in front of the seawall must not extend further seaward than 20 feet from the line of vegetation.~~ Sand fences, signage, or a bollard and rope fence are not proposed to be installed adjacent to the dune restoration project and are prohibited without an appropriate beachfront construction certificate and dune protection permit;

- The "Vegetation Relocation Implementation Timeline" in Attachment C shall be changed from 90 days to 180 days, and the start of the timeline shall be delayed until the beginning of October.

Lisa Blair seconded.

Vice-Chairperson Jeffrey Hill proposed a friendly amendment to required that a formal quarterly review is conducted by Park Board staff.

Chairperson Cate Black and Lisa Blair accepted the friendly amendment, and the following votes were cast:

In favor:	Antonelli, Black, Blair, Brown, Cook, Hill, Hollaway
Opposed:	None
Absent:	None
Non-voting participant:	CM Listowski (Ex-Officio)

The motion passed.

DISCUSSION AND ACTION ITEMS

THE MEETING ADJOURNED AT 5:07 PM

Planning Commission
Coastal Resources Division
City of Galveston
May 19, 2020

20P-015 STAFF REPORT

ADDRESS:
18227 E De Vaca

LEGAL DESCRIPTION:
Property is legally described as Lot 60 (61-1), Indian Beach, Section 4, a subdivision located in the City and County of Galveston, Texas.

APPLICANT/REPRESENTATIVE:
Blake Moak

PROPERTY OWNER:
Blake and Jillian Moak

REQUEST:
Beachfront Construction Certificate/Dune Protection Permit for construction of a single-family dwelling, driveway, and dune walkover.

APPLICABLE LAND USE REGULATIONS:
Chapter 29, Article 2, Beach Access Dune Protection and Beachfront Construction Regulation.

STAFF RECOMMENDATION:
Approval with Conditions

EXHIBITS:
A – Aerial Map
B – Topographic Survey
C – Site Plan & Drawings
D – Site Photos
E – GLO Comment Letter

STAFF:
Virginia Greb
Coastal Resources Asst. Mgr.
VGreb@GalvestonTX.gov

Note: This product is for informational purposes and may not have been prepared for or be suitable for legal, engineering, or surveying purposes. It does not represent an on-the-ground survey and represents only the approximate relative location of property boundaries. The data presented on these pages is not legally binding on the City of Galveston or any of its departments. These maps and the associated data are representations ONLY and may contain errors in the databases. Therefore, the information presented on this map is for informational purposes only and should not be construed to be legally binding.

Executive Summary:

The City of Galveston's Dune Protection and Beach Access Plan designates the Planning Commission as the authority to review and consider for approval of applications for a Beachfront Construction Certificate/Dune Protection Permit when the proposed construction activities will occur in areas within or seaward of the Dune Conservation Area or up to 50-feet landward of the Dune Protection Line. The Dune Protection Line is defined as the area within 25-feet landward of the North Toe of the Critical Dune Area or, for those beach areas where no dunes exist west of the terminus of the Seawall, within 200-feet landward of the Line of Vegetation.

The applicant is requesting approval to construct a single-family dwelling, driveway, and dune walkover within the Enhanced Construction Zone in an area approximately 39-feet from the North Toe of the Critical Dune Area and 67-feet from the Line of Vegetation. This is landward of the Dune Protection Line and within the Planning Commission review area. According to the application materials, the proposed construction activities appear to be landward of dunes and dune vegetation. Therefore, no mitigation activities are proposed.

Site and Surrounding Area:

The subject site is a 0.7350-acre lot located in the Indian Beach Subdivision. Single-family dwellings are located to the North, East and West, and beach area is located to the South of the subject property. According to the Bureau of Economic Geology, this area is eroding at a rate of three to four feet per year.

Analysis:
The table below summarizes the applicant survey and site plan (Attachments "B" and "C") regarding the proposed new construction and the location of proposed construction in relation to on-site conditions:

Proposed Structure's Distance from:	Distance (Feet)
…North Toe of the Dune	~39
…the Line of Vegetation	~67

In accordance with Chapter 29: Planning – Beach Access Dune Protection & Beach Front Construction, before issuing a permit, the Planning Commission must find that the proposed construction conforms with the following Beachfront Construction Certificate and Dune Protection Permit standards:

(1) The proposed activity is not a prohibited activity as defined in these standards.

The request conforms to the City of Galveston's Dune Protection and Beach Access Plan and Erosion Response Plan. The drawings, (Attachment "C"), are submitted with this request.

The applicant is proposing to build within 39-feet of the North Toe of the Critical Dune Area and within the Enhanced Construction Zone. The applicant is proposing fibercrete for the footprint of the proposed single-family dwelling and crushed rock for the proposed driveway material. Staff reviewed the application materials and found no prohibited activities proposed seaward of the Dune Protection Line.

The proposed construction is landward of the Dune Protection Line and the Dune Conservation Area. Therefore, a ground floor enclosure is permitted in the area 25-feet landward of the North Toe of the Critical Dune Area. Note: the City's locally adopted flood ordinance requires ground floor enclosures to be no greater than 299 square feet as measured from the outside of the enclosure.

(2) The proposed activity will not materially weaken dunes or materially damage dune vegetation seaward of the Dune Protection Line based on substantive findings as defined in "Technical Standards" of these standards.

According to Section 29-2(k) Technical Standards, the Planning Commission shall not approve an application for construction if it is determined that it will result in a material weakening and material damage of dune vegetation. The following standards are to be used to make this determination:

a. The activity shall not result in the potential for increased flood damage to the proposed construction site or adjacent property;

b. The activity shall not result in runoff or drainage patterns that aggravate erosion on or off the site;

c. The activity shall not result in significant changes to dune hydrology;

d. The activity shall not result in adverse affects on dune complexes or dune vegetation;

e. The activity shall not significantly increase the potential for washovers or blowouts to occur; or

f. The Commission shall not issue a Beachfront Construction Certificate and Dune Protection Permit authorizing construction unless the construction and property design is designed so as to minimize impacts on natural hydrology. Such projects shall not cause erosion to adjacent properties, critical dune areas, or the public beach.

The Technical Standards also state that the Planning Commission should take into consideration all comments from the Texas General Land Office when deciding whether to grant a Beachfront Construction Certificate/Dune Protection Permit. Attachment "E" lists the comments from the Texas General Land Office for this request. Should the Planning Commission approve this request, the GLO comments are recommended as specific conditions for this request.

The proposed construction will be required to be consistent with FEMA minimum requirements, which should not increase the potential for increased flood damage to the construction site or adjacent property.

As a result of the construction, the applicant is prohibited from affecting runoff or drainage patterns that would aggravate erosion on or off site, result in significant changes to dune hydrology, or significantly increase the potential for washovers or blowouts to occur. Runoff should be directed away from the dune area. The applicant is required to direct all non-natural drainage on the lot away from the beach and dunes, and toward the drainage infrastructure in the subdivision and in the street landward of the lot. Drainage plans are to be reviewed and approved by the City Engineering Department.

Given the proposed construction activities are taking place landward of the Dune Conservation Area, staff finds that the proposed construction will not materially weaken dunes or materially damage dune vegetation as defined by these Technical Standards.

(3) There are no practicable alternatives to the proposed activity that is located seaward of the Dune Protection Line and adverse effects cannot be avoided as provided in the Mitigation sequence as outlined in these Standards.

The City's Dune Protection and Beach Access Plan states that the Planning Commission shall utilize the Mitigation Sequence in determining whether to issue a permit for an activity located seaward of the Dune Protection Line, after the determination that no material weakening of dunes or material damages to dunes will occur within critical dune areas or seaward of the Dune Protection Line. The mitigation sequence is as follows:

1) **Avoid** the impact altogether by not taking a certain action or parts of an action;

2) **Minimize** impacts by limiting the degree or magnitude of the action and its implementation;

3) **Rectify** the impact by repairing, rehabilitating, or restoring the affected environment; and,

4) **Compensate** for the impact by replacing resources lost or damaged.

Proposed construction is landward of the Dune Conservation Area. No construction activities seaward of the Dune Protection Line are proposed with this request and no adverse effects to dunes or dune vegetation are expected.

(4) The applicant's mitigation plan, for an activity seaward of the Dune Protection Line, if required, will adequately minimize, mitigate, and/or compensate for any unavoidable adverse effects.

No construction activities seaward of the Dune Protection Line are proposed with this request and no adverse effects to dunes or dune vegetation are expected.

(5) The proposed activity complies with any applicable requirements of: Requirements for Beachfront Construction Certificate and Dune Protection Permits and Management of the Public Beach of this Section; and

The application conforms to the City of Galveston requirements for a Beachfront Construction Certificate and Dune Protection Permit and the City requirements for the management of the public beach.

(6) The structure is located as far landward as practicable.

The proposed structure is not located as far landward as practicable. In order to comply with city and state standards the applicant shall move the structure as far landward as practicable to meet the 20-foot building line.

The proposed construction is within the Enhanced Construction Zone, which is an area defined as being 125-feet landward of the Dune Conservation Area along Galveston's Gulf coast with an aggregate shoreline change of -2 to -8 feet per year. The City's Erosion Response Plan requires the following additional construction standards for any proposed construction activities within the Enhanced Construction Zone:

- Plans and certifications for proposed structures shall be sealed by a registered professional engineer licensed in the State of Texas, providing evidence of the adequacy of elevated building foundations and the proper placement, compaction, and protection of fill when used as construction for all newly constructed, substantially damaged, and substantially improved buildings elevated on pilings, posts, piers, or columns in accordance with the latest edition of specifications outlined in American Society of Civil Engineers, Structural Engineering Institute, Flood Resistant Design and Construction, ASCE 24-05.

Staff Recommendation:

Staff recommends approval of 20P-015 with the following conditions:

Specific Conditions to Case 20P-015:

1. The applicant shall move the structure as far landward as practicable to meet the 20-foot building line in order to comply with city and state standards. A beachfront permit shall not be issued until the applicant provides revised drawings that reflect this change and satisfies the requirements of all City departments;

2. Plans and certifications for proposed structures within the enhance construction zone shall be sealed by a registered professional engineer licensed in the State of Texas, providing evidence of the adequacy of elevated building foundations and the proper placement, compaction, and protection of fill when used as construction for all newly constructed, substantially damaged, and substantially improved buildings elevated on pilings, posts, piers, or columns in accordance with the latest edition of specifications outlined in American Society of Civil Engineers, Structural Engineering Institute, Flood Resistant Design and Construction, ASCE 24-05;

3. The applicant shall adhere to all comments from the GLO included in Attachment "E":

    a. The City must minimize the proliferation of excessive private access by permitting only the minimum necessary number of private beach access points to the beach from any subdivision.

    b. The applicant may not damage any dune vegetation or clear or remove any vegetation on either side of the proposed dune walkover for the purpose of facilitating construction.

    c. Dune walkovers may not impede or restrict public access to the beach at normal high tide. The applicant should terminate the dune walkover no farther seaward than the line of vegetation as depicted on the survey dated April 9, 2020 included in the application materials.

d. The City shall require the applicant to relocate the walkover to follow any landward migration of the public beach or seaward migration of the dunes.

e. The dune walkover shall be constructed at a height above the highest dune of not less than the width of the dune walkover and maintain this height over the entire dune area.

f. With the exception of the paired posts constructed on each side of the proposed dune walkover, the support posts must be placed at intervals no closer than six feet and in such a manner that new posts are not needed if the walkway requires relocation or elevation in the future.

g. The proposed dune walkover must be constructed to maintain ½-inch spacing between the slats to allow rain and sand to pass through the decking.

h. Concrete may not be used to stabilize the base of the pilings of the dune walkover.

i. Paving or altering the area between the line of vegetation and 25 feet landward of the north toe of the dune is not proposed and is prohibited.

j. Since the proposed single-family residence is located within 200 feet of the line of vegetation, paving used under the habitable structure and for driveways connecting the habitable structure and the street is limited to the use of unreinforced fibercrete in four-foot by four-foot sections, four inches thick with sections separated by expansion joints, or pervious material. A habitable structure is defined as a structure used or usable for habitation. The area beneath uncovered decks or stairs may not be paved.

k. The driveway must be limited to the linear width of the primary structure, along the main street, and a minimum of 15% of the front yard must be maintained as open/unimproved area.

l. The City must ensure the proposed construction is located as far landward as practicable.

m. The City may only permit the applicant to construct an enclosure beneath the habitable structure if the walls are breakaway or louvered and the construction is consistent with the requirements of the National Flood Insurance Program.

n. The City must ensure the proposed construction is consistent with FEMA minimum requirements or with the FEMA approved local ordinance.

o. The City must ensure the proposed habitable structure is designed for feasible relocation.

p. The proposed construction activities must not result in the potential for increased flood damage to the proposed construction site or adjacent property, result in runoff or drainage patterns that aggravate erosion, cause significant changes to dune hydrology, adversely affect dune complexes or dune vegetation, or significantly increase the potential for washovers or blowouts to occur.

q. The proposed construction activities must minimize impacts on natural hydrology and not cause erosion of adjacent properties, critical dune areas, or the public beach.

r. Construction of the proposed dune walkover should conform to the GLO's guidelines provided in the Dune Protection and Improvement Manual for the Texas Gulf Coast, which is located at http://www.glo.texas.gov/coast/coastal-management/forms/files/dune-protection-manual-gpb.pdf

s. Please be advised that the line of vegetation is dynamic. Structures may not encroach on the public beach. If the structure becomes located seaward of the line of vegetation because of loss of elevation, the structure may be allowed to remain in place if it does not significantly interfere with public access to the beach or present a public health and safety risk. Structures located seaward of the line of vegetation and landward of the line of mean high tide will periodically be reassessed on a case-by-case basis, and owners may be allowed to make certain repairs under the Beach/Dune rules and local government plans.

t. If any part of a structure comes to be located seaward of the line of mean high tide, it becomes an unauthorized structure on state-owned land. Repairs are prohibited and the state may take action to remove the structure.

Additionally, the GLO provided the following recommendations included in Attachment "E":

u. The City may consider requesting that the applicant construct the dune walkover in a location where shared access may be provided to a neighboring property owner in the future.

v. The use of permeable materials, such as brick pavers, limestone, or gravel, is recommended for drives or parking areas.

Standard Conditions:

4. Upon completion of the development, and prior to the issuance of a "Certificate of Occupancy," for those structures requiring Planning Commission approval, the permittee shall provide the Development Services Department with a final survey indicating finished elevations, surfaces, drainage patterns, fences, dune walkovers and landscape detail, or certification by a registered professional engineer that all Permit conditions have been met. No "Certificate of Occupancy" shall be approved until the Development Services Department approves a "Certificate of Completion," verifying that all Permit conditions have been satisfied;

5. Work approved under this permit shall be completed within one (1) year from the date this permit is issued. If work is not completed in this time period, it will be necessary for the applicant to reapply for a Beachfront Construction Certificate/Dune Protection Permit, unless an extension of the period, prior to the expiration, has been submitted to the Texas General Land Office for review and approved by the City;

6. The applicant shall adhere to all comments/conditions received from city departments. Should conformance with the comments/conditions require alterations to the project, as approved, the case must be returned to the Planning Commission for additional review and approval;

7. All non-natural drainage from the dwelling shall be directed away from the beach and dunes, toward the street landward of the lot and to the drainage infrastructure in the subdivision, and drainage plans shall be submitted to the City of Galveston Public Works Department, Division of Engineering for approval;

8. The area seaward of the dwelling shall be designated a dune protection area, prohibiting any alteration of natural conditions in this area, except for any future proposed dune walkovers, approved by the Development Services Department and the Texas General Land Office under separate review;

9. The applicant shall coordinate any/all dune enhancement plans with the Development Services Department; and,

10. The applicant must adhere to all aspects of Section 29: Planning-Beach Access Dune Protection & Beachfront Construction.

ERP PRACTICABLE DEFINITION

Practicable means available and capable of being done after taking into consideration existing building practices, siting alternatives, and the footprint of the structure in relation to the area of the building portion of the lot, and considering the overall development plan for the property.

TEXAS ADMINISTRATIVE CODE PRACTICABLE DEFINITION 15.2(57)

In determining what is practicable, local governments shall consider the effectiveness, scientific feasibility, and commercial availability of the technology or technique. Local governments shall also consider the cost of the technology or technique.

Respectfully Submitted,

Virginia Greb

05/14/2020

Virginia Greb
Coastal Resources Assistant Manager

Date

05/14/2020

Catherine Gorman, AICP
Assistant Planning Director / HPO

Date

18227 E De Vaca
Case #20P-015

BEG

Legend

End Point Rate (ft/yr)

- Eroding (-1ft or more)
- Stable (-1 to +1ft)
- Accreting (+1ft or more)
- Parcels
- Subdivisions

0 50 100 200 300 Feet

1 inch = 172 feet

Data Sources:

2018 Aerial Imagery and Parcel Data from Galveston CAD, Shoreline Change Data from U.T. Bureau of Economic Geology, Flood Insurance Rate Map from FEMA.

Map prepared by the City of Galveston Development Services Department (VGreb) - 4/7/2020

This product is for informational purposes and may not have been prepared for or be suitable for legal, engineering, or surveying purposes. It does not represent an on-the-ground survey and represents only the approximate relative location of property boundaries.

The data presented on these pages is not legally binding on the City of Galveston or any of its departments. These maps and the associated data are representations ONLY and may contain errors in the databases.

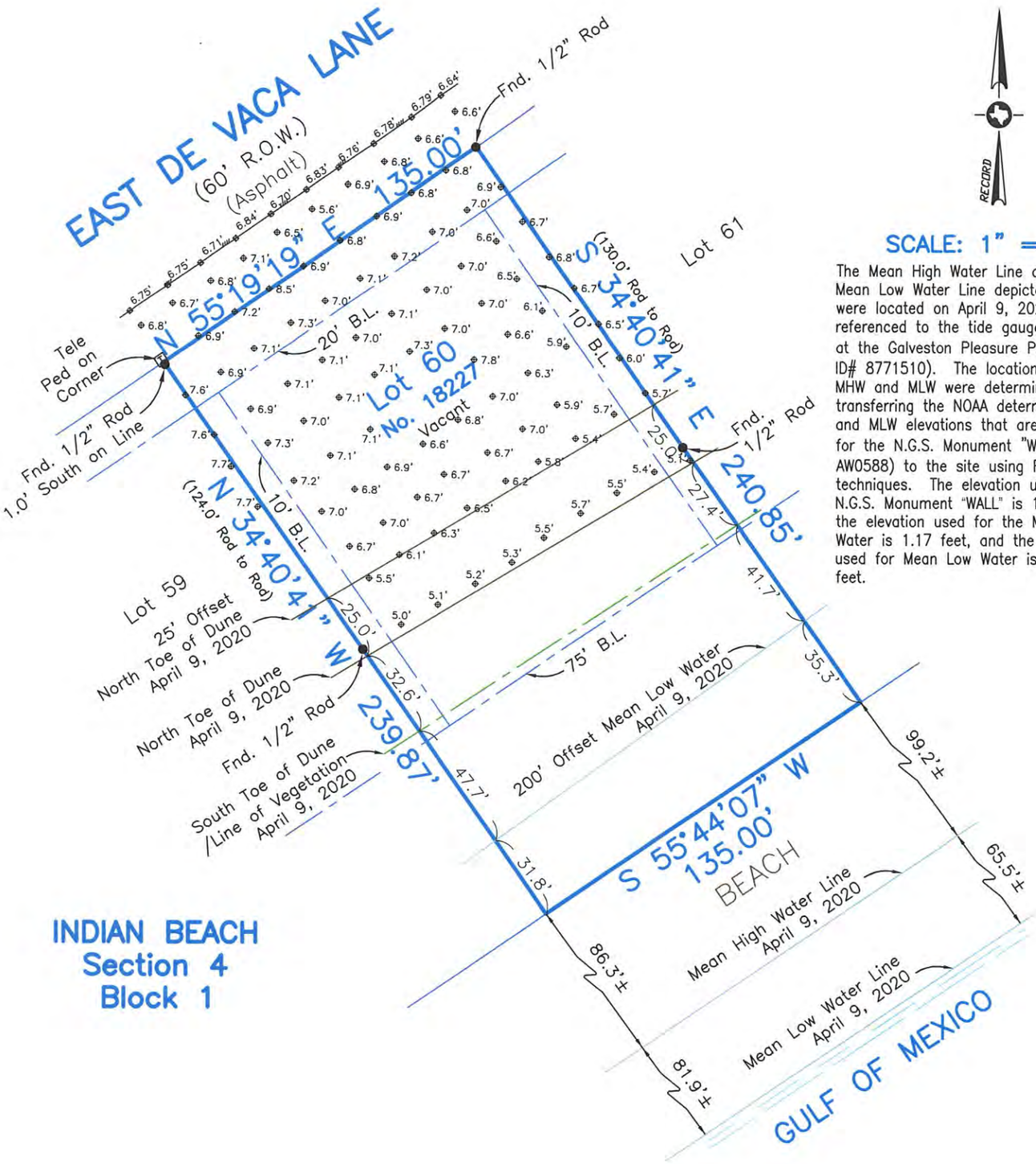

SCALE: 1" = 50'

The Mean High Water Line and the Mean Low Water Line depicted hereon were located on April 9, 2020, and are referenced to the tide gauge located at the Galveston Pleasure Pier (NOAA ID# 8771510). The location of the MHW and MLW were determined by transferring the NOAA determined MHW and MLW elevations that are published for the N.G.S. Monument "WALL" (PID AW0588) to the site using RTK GPS techniques. The elevation used for the N.G.S. Monument "WALL" is 14.11 feet, the elevation used for the Mean High Water is 1.17 feet, and the elevation used for Mean Low Water is −0.30 feet.

Survey of Lot Sixty (60), in Block One (1), of INDIAN BEACH, Section Four (4), a subdivision in Galveston County, Texas, according to the map or plat thereof recorded in Volume 18, Page 13, in the Office of the County Clerk of Galveston County, Texas.

I hereby certify that on the below date, the herein described property, together with improvements located thereon, was surveyed on the ground and under my direction, and that this map, together with dimensions as shown hereon, accurately represents the facts as found on the ground this date.

Brian S. House
Registered Professional
Land Surveyor No. 6520

STATE OF TEXAS
REGISTERED
BRIAN S. HOUSE
6520
PROFESSIONAL
LAND SURVEYOR

SURVEY DATE:	APRIL 9, 2020
FILE No.:	4133-0000-0061-001
DRAFTING:	ATC/AM
JOB No.:	20-0195

High Tide Land Surveying LLC.
GALVESTON OFFICE
Registration Number: 10193855
(409) 740-1517 www.hightidelandsurveying.com
8017 HARBORSIDE DRIVE | GALVESTON, TX 77554
Mailing | P.O. BOX 16142 | GALVESTON, TX 77552

NOTES:

1) This property does lie within the 100 Year Flood Plain as established by the Federal Emergency Management Agency.
2) This property is subject to any restrictions of record and may be subject to setbacks from power lines as established by OSHA (call your power company).
3) Surveyed tract subject to a non-locatable vegetation line reflected on the recorded plat.
4) Surveyed tract subject to easement granted to Houston Lighting and Power Company recorded under Film Code No.s 006-28-0019 and 006-17-0526, both in the Galveston County records.
5) Surveyed tract subject to dune easement recorded under Film Code No. 013-77-0246, in the Galveston County records.
6) Bearings based on Monumentation the South R.O.W. line of East de Vaca Lane.
7) Surveyed without benefit of title report.

SQUARE FOOTAGE

COVERED SLAB AREA:	657	SF
UNCOVERED SLAB AREA:	N/A	SF
DRIVE & WALK WAYS:	N/A	SF
IMPERVIOUS SURFACES:	657	SF
LOT AREA:	32,448	SF
IMPERVIOUS COVERAGE	2	%

2 4/21/20

LEGEND:

PROPERTY LINE
B.L. = BUILDING LINE
U.E. = UTILITY EASEMENT
A.E. = AERIAL EASEMENT
I.R. = IRON ROD
CRUSHED ROCK

THE GENERAL CONTRACTOR SHALL VERIFY THESE CONSTRUCTION DOCUMENTS WITH THE CURRENT FEMA RESIDENTIAL COASTAL CONSTRUCTION MANUAL. IF ANY DISCREPANCY OCCURS PLEASE CONTACT MARK W. TODD ARCHITECTS, INC.

THE CONSTRUCTION OF THESE PLANS SHALL COMPLY WITH THE PROVISIONS SET FORTH IN THE INTERNATIONAL RESIDENTIAL CODE 2015, AND SHALL ALSO COMPLY WITH LOCAL BUILDING CODES.

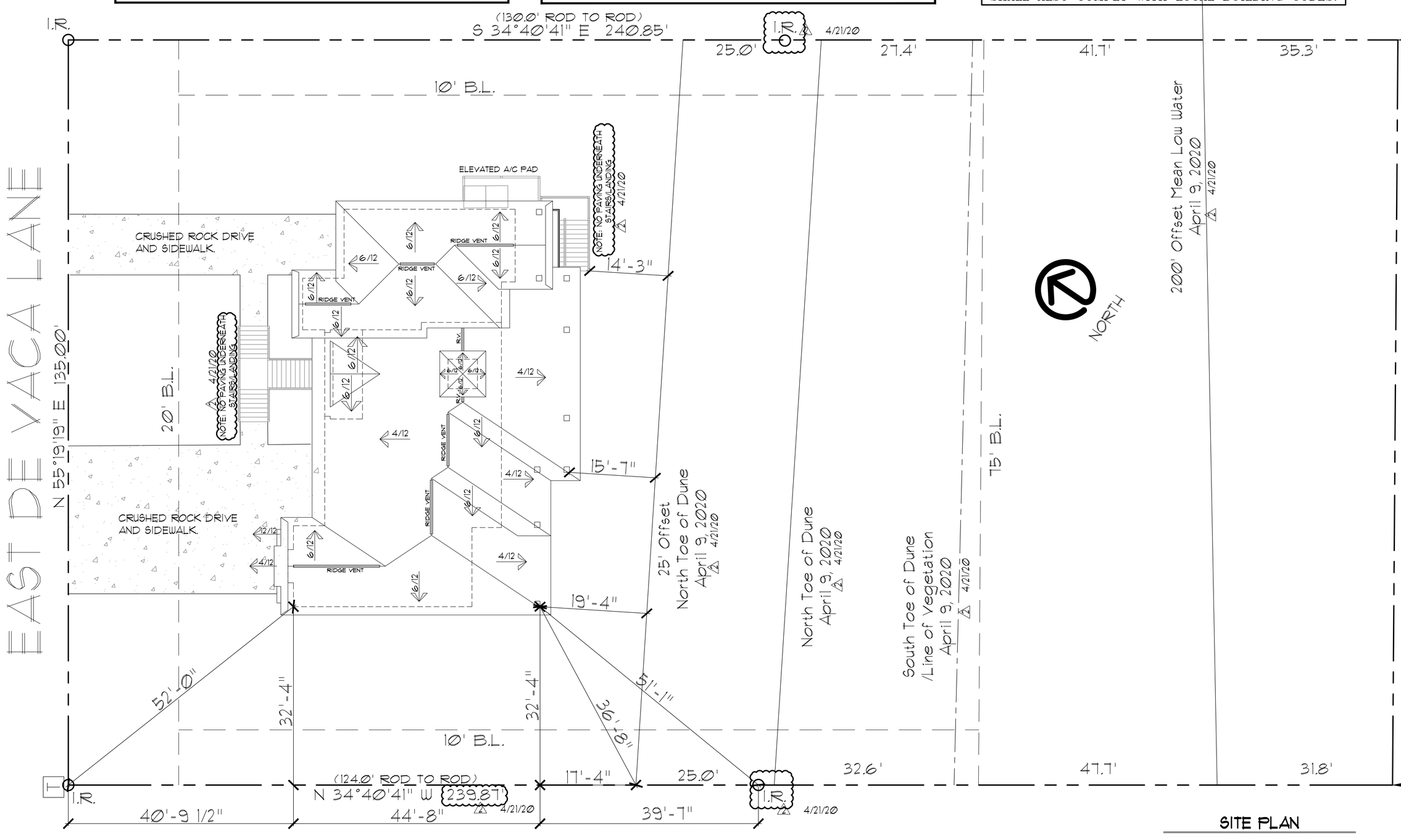

SITE PLAN

SCALE: 1/8" = 1'-0"

REGISTERED ARCHITECT BURNHAM W. TODD 12180 STATE OF TEXAS
EXP. 12/31/20
4/23/2020

© COPYRIGHT
MARK W. TODD • ARCHITECTS, INC.
THESE DRAWINGS AND SPECIFICATIONS ARE THE PROPERTY AND COPYRIGHT OF THE ARCHITECT AND SHALL NOT BE USED ON ANY OTHER WORK EXCEPT BY AGREEMENT WITH THE ARCHITECT. WRITTEN DIMENSIONS TAKE PRECEDENCE OVER SCALED DIMENSIONS AND SHALL BE VERIFIED ON THE JOB. ANY DISCREPANCY SHALL BE BROUGHT TO THE ATTENTION OF THE ARCHITECT PRIOR TO COMMENCEMENT OF THE WORK.

Mark W. Todd • Architects, Inc.
Architects • Planners • Consultants
1440 Lake Front Circle, Ste. 120
The Woodlands, Texas 77380
(281) 363-2593
FAX (281) 367-9053

A CUSTOM HOME FOR:
BLAKE
MOAK
INDIAN BEACH
LOT: 60 BLK: 1 SECT: 4

Project #	170318R
Date	4/23/2020
Scale	1/8" = 1'-0"
Dwn. By	AA/DB
Ckd. By	LLM

Revisions
1 7/16/19
2 4/21/20

A-1

THE GENERAL CONTRACTOR SHALL VERIFY THESE CONSTRUCTION DOCUMENTS WITH THE CURRENT FEMA RESIDENTIAL COASTAL CONSTRUCTION MANUAL. IF ANY DISCREPANCY OCCURS PLEASE CONTACT MARK W. TODD ARCHITECTS, INC.

THE CONSTRUCTION OF THESE PLANS SHALL COMPLY WITH THE PROVISIONS SET FORTH IN THE INTERNATIONAL RESIDENTIAL CODE 2015, AND SHALL ALSO COMPLY WITH LOCAL BUILDING CODES.

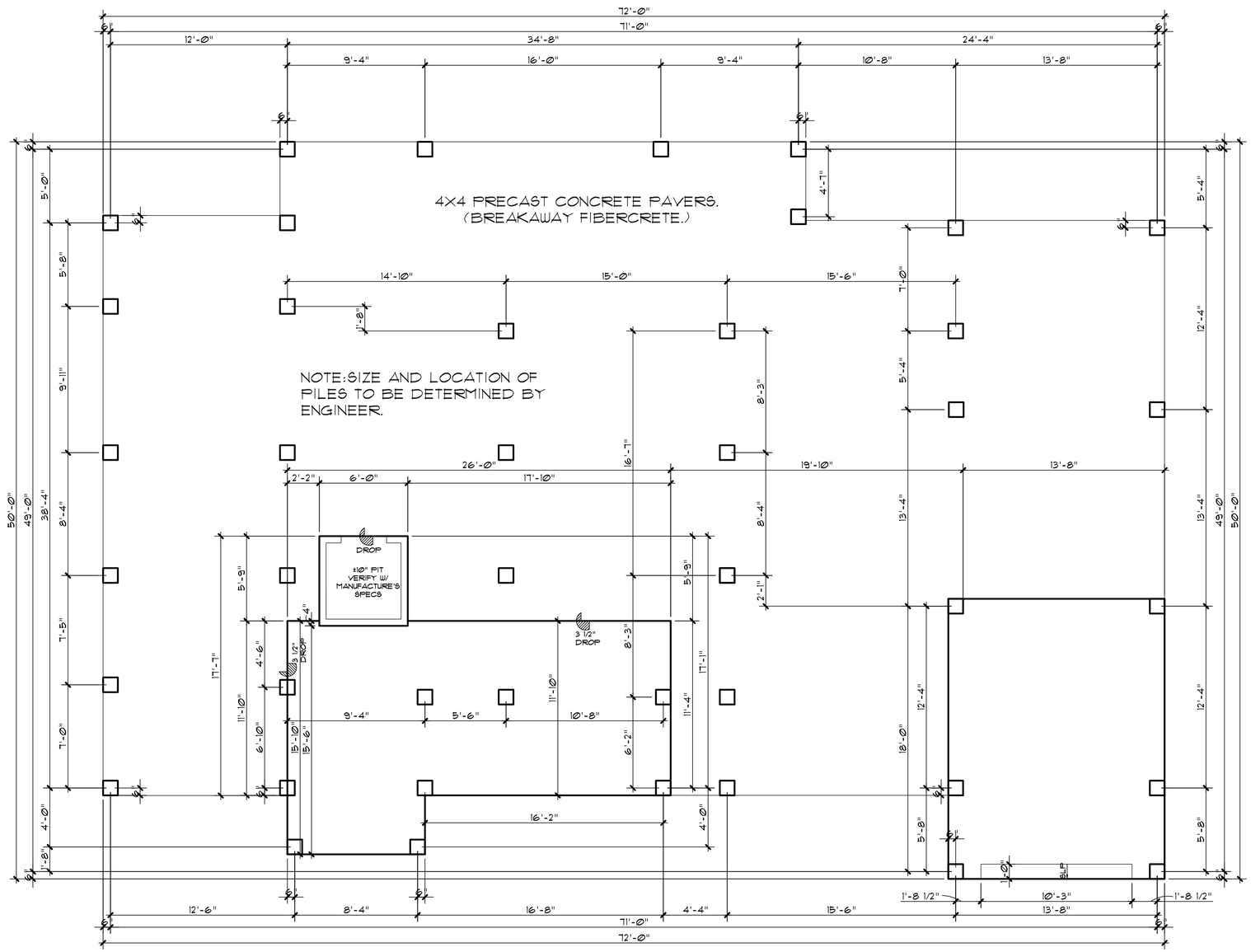

FOUNDATION PROFILE

SCALE: 1/4" = 1'-0"

REGISTERED ARCHITECT MARKHAM W. TODD 12180 STATE OF TEXAS

EXP. 12/31/20

4/22/2020

© COPYRIGHT
MARK W. TODD • ARCHITECTS, INC.
THESE DRAWINGS AND SPECIFICATIONS ARE THE PROPERTY AND COPYRIGHT OF THE ARCHITECT AND SHALL NOT BE USED ON ANY OTHER WORK EXCEPT BY AGREEMENT OF THE ARCHITECT. WRITTEN DIMENSIONS TAKE PRECEDENCE OVER SCALED DIMENSIONS AND SHALL BE VERIFIED ON THE JOBSITE. ANY DISCREPANCIES SHALL BE BROUGHT TO THE ATTENTION OF THE ARCHITECT PRIOR TO COMMENCEMENT OF THE WORK.

Mark W. Todd • Architects, Inc.
Architects • Planners • Consultants
1440 Lake Front Circle, Ste. 120
The Woodlands, Texas 77380
(281) 363-2593
FAX (281) 367-9053

A CUSTOM HOME FOR:
BLAKE
MOAK
INDIAN BEACH
LOT: 60 BLK: 1 SECT: 4

Project #	170318R
Date	4/22/2020
Scale	1/4" = 1'-0"
Dwn. By	AA/DB
Ckd. By	LLM

Revisions
1 7/16/19
2

A-2

THE GENERAL CONTRACTOR SHALL VERIFY THESE CONSTRUCTION DOCUMENTS WITH THE CURRENT FEMA RESIDENTIAL COASTAL CONSTRUCTION MANUAL. IF ANY DISCREPANCY OCCURS PLEASE CONTACT MARK W. TODD ARCHITECTS, INC.

THE CONSTRUCTION OF THESE PLANS SHALL COMPLY WITH THE PROVISIONS SET FORTH IN THE INTERNATIONAL RESIDENTIAL CODE 2015, AND SHALL ALSO COMPLY WITH LOCAL BUILDING CODES.

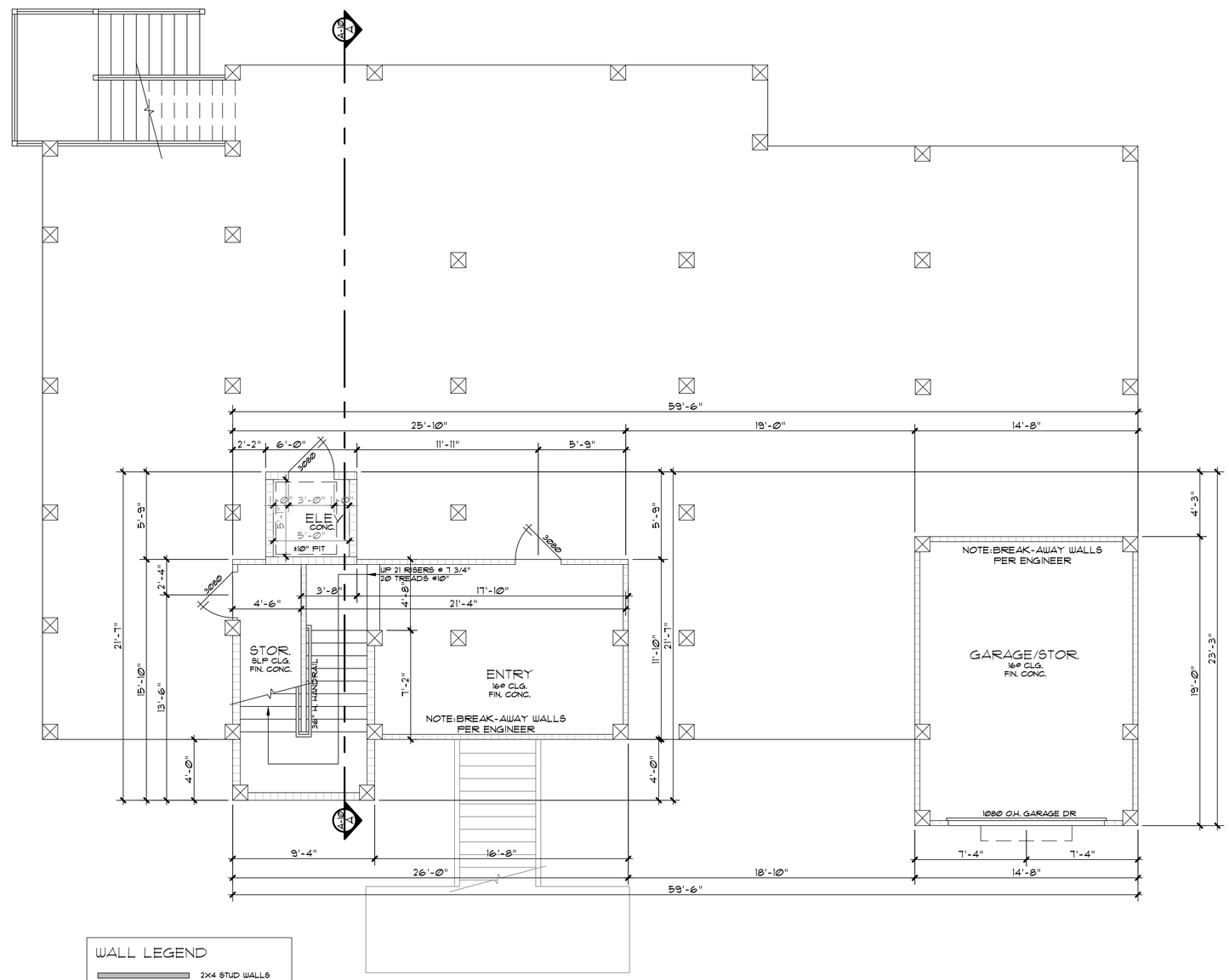

PILE LEVEL

SCALE: 1/4" = 1'-0"

REGISTERED ARCHITECT MARKHAM W. TODD 12180 STATE OF TEXAS
EXP. 12/31/20
4/22/2020

© COPYRIGHT
MARK W. TODD • ARCHITECTS, INC.
THESE DRAWINGS AND SPECIFICATIONS ARE THE PROPERTY AND COPYRIGHT OF THE ARCHITECT AND SHALL NOT BE USED ON ANY OTHER WORK EXCEPT BY AGREEMENT OF THE ARCHITECT. WRITTEN DIMENSIONS TAKE PRECEDENCE OVER SCALED DIMENSIONS AND DISCREPANCIES SHALL BE BROUGHT TO THE ATTENTION OF THE ARCHITECT PRIOR TO COMMENCEMENT OF THE WORK.

Mark W. Todd • Architects, Inc.
Architects • Planners • Consultants
1440 Lake Front Circle, Ste. 120
The Woodlands, Texas 77380
(281) 363-2593
FAX (281) 367-9053

A CUSTOM HOME FOR:
BLAKE
MOAK
INDIAN BEACH
LOT: 60 BLK: 1 SECT: 4

Project #	170318R
Date	4/22/2020
Scale	1/4" = 1'-0"
Dwn. By	AA/DB
Ckd. By	LLM

Revisions	
1	7/16/19
2	

A-3

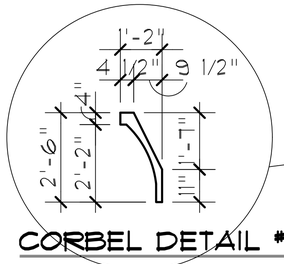

CORBEL DETAIL #1

SCALE: 1/2"-1'-0"

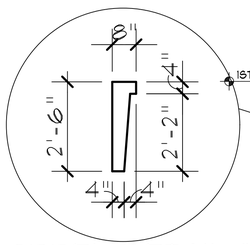

CORBEL DETAIL #2

SCALE: 1/2"-1'-0"

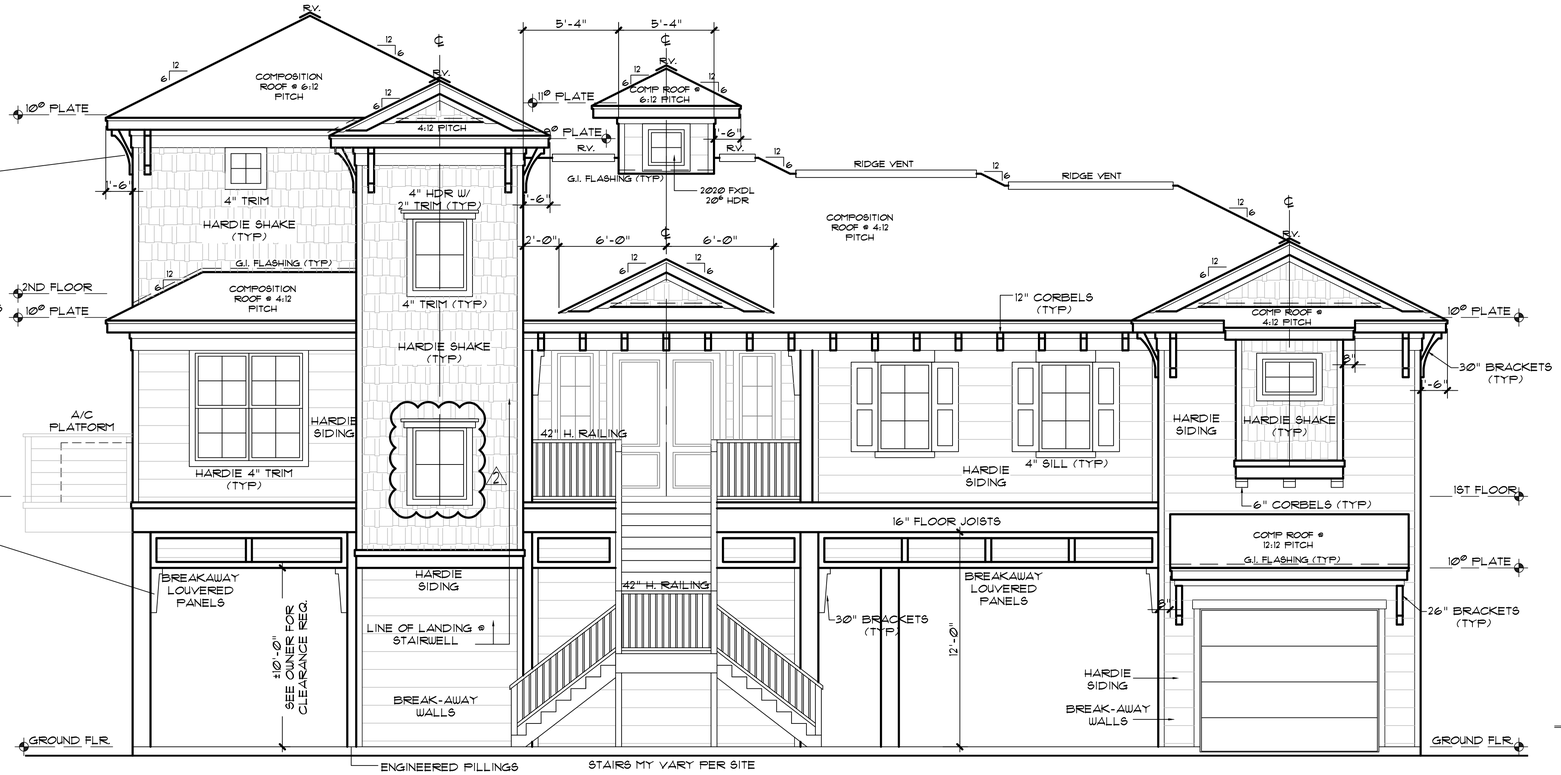

FRONT ELEVATION

SCALE: 1/4" = 1'-0"

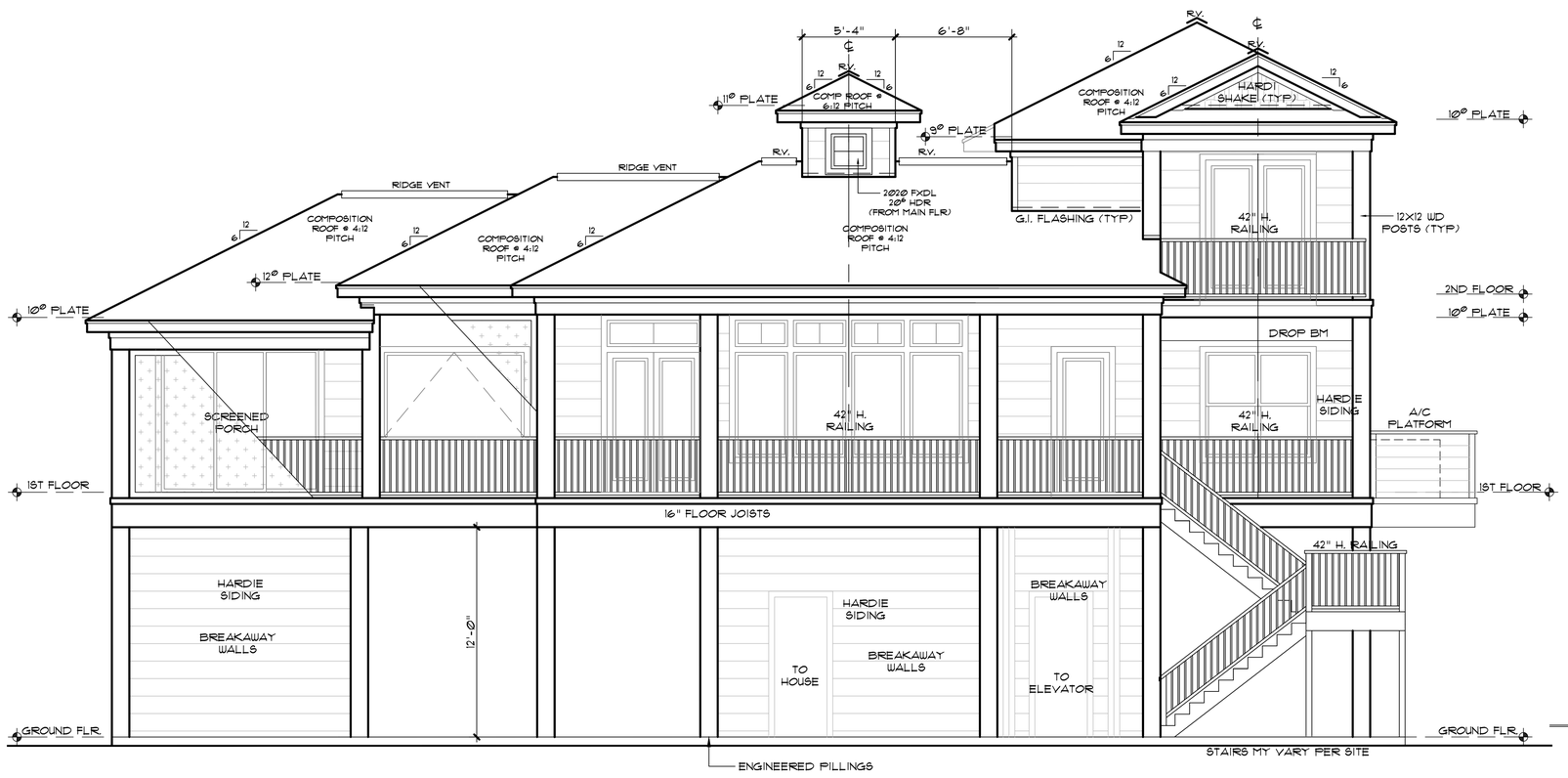

REAR ELEVATION

SCALE: 1/4" = 1'-0"

THE GENERAL CONTRACTOR SHALL VERIFY THESE CONSTRUCTION DOCUMENTS WITH THE CURRENT FEMA RESIDENTIAL COASTAL CONSTRUCTION MANUAL. IF ANY DISCREPANCY OCCURS PLEASE CONTACT MARK W. TODD ARCHITECTS, INC.

THE CONSTRUCTION OF THESE PLANS SHALL COMPLY WITH THE PROVISIONS SET FORTH IN THE INTERNATIONAL RESIDENTIAL CODE 2015, AND SHALL ALSO COMPLY WITH LOCAL BUILDING CODES.

REGISTERED ARCHITECT MARK WILLIAM TODD 12180 STATE OF TEXAS

EXP. 12/31/20

4/22/2020

© COPYRIGHT
MARK W. TODD • ARCHITECTS, INC.
THESE DRAWINGS AND SPECIFICATIONS ARE THE PROPERTY OF THE ARCHITECT AND THE ARCHITECT AND SHALL NOT BE USED ON ANY OTHER WORK EXCEPT BY AGREEMENT OF THE ARCHITECT. THE ARCHITECT HAS TAKEN PRECEDENCE OVER SCALED DIMENSIONS AND SHALL BE VERIFIED ON THE JOBSITE. ANY DISCREPANCY SHALL IMMEDIATELY BE BROUGHT TO THE ATTENTION OF THE ARCHITECT PRIOR TO COMMENCEMENT OF THE WORK.

Mark W. Todd • Architects, Inc.
Architects • Planners • Consultants
1440 Lake Front Circle, Ste. 120
The Woodlands, Texas 77380
(281) 363-2593
FAX (281) 367-9053

A CUSTOM HOME FOR:
BLAKE
MOAK
INDIAN BEACH
LOT: 60 BLK: 1 SECT: 4

Project #	170318R
Date	4/22/2020
Scale	1/4" = 1'-0"
Dwn. By	AA/DB
Ckd. By	LLM

Revisions	
1	7/16/19
2	8/15/19

A-6

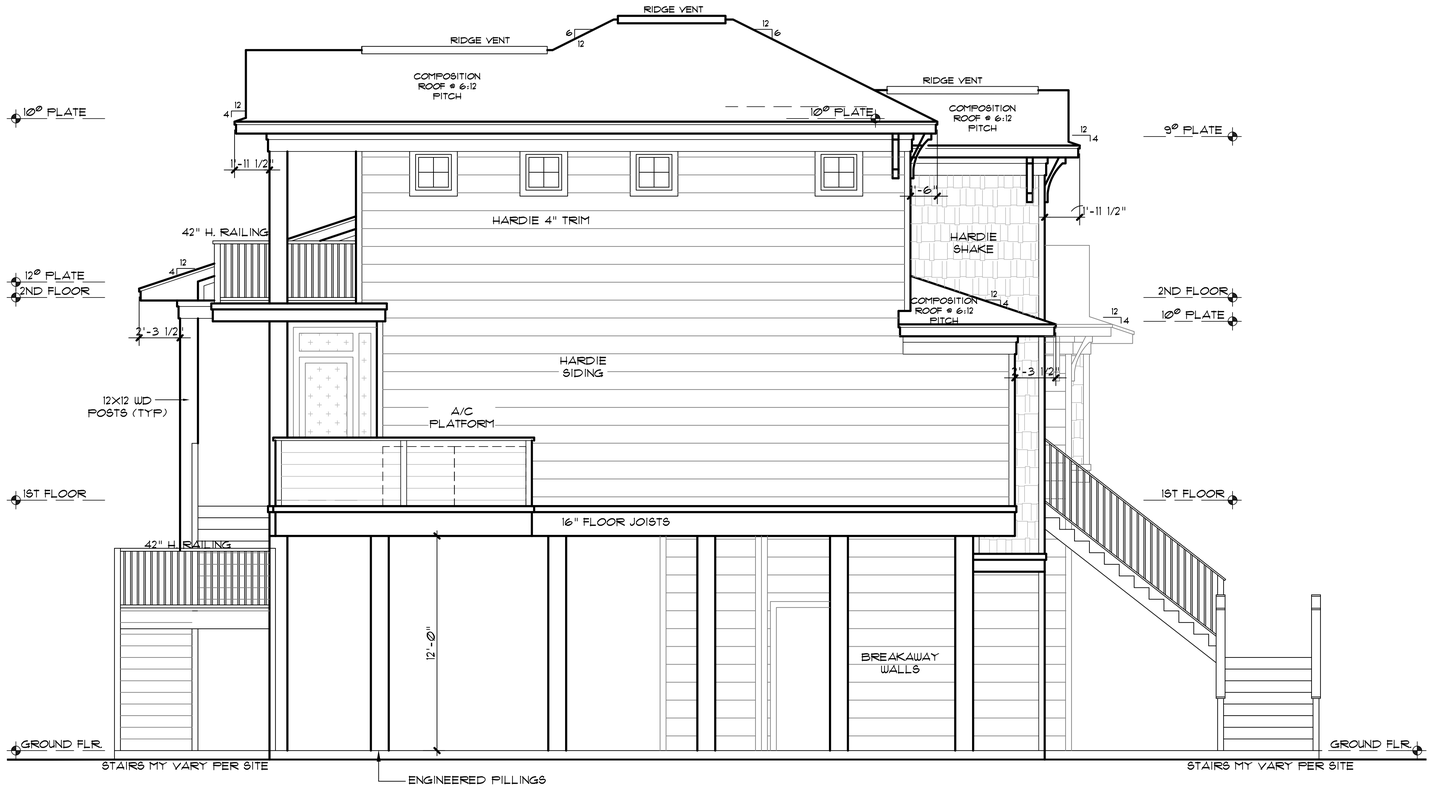

LEFT ELEVATION

SCALE: 1/4" = 1'-0"

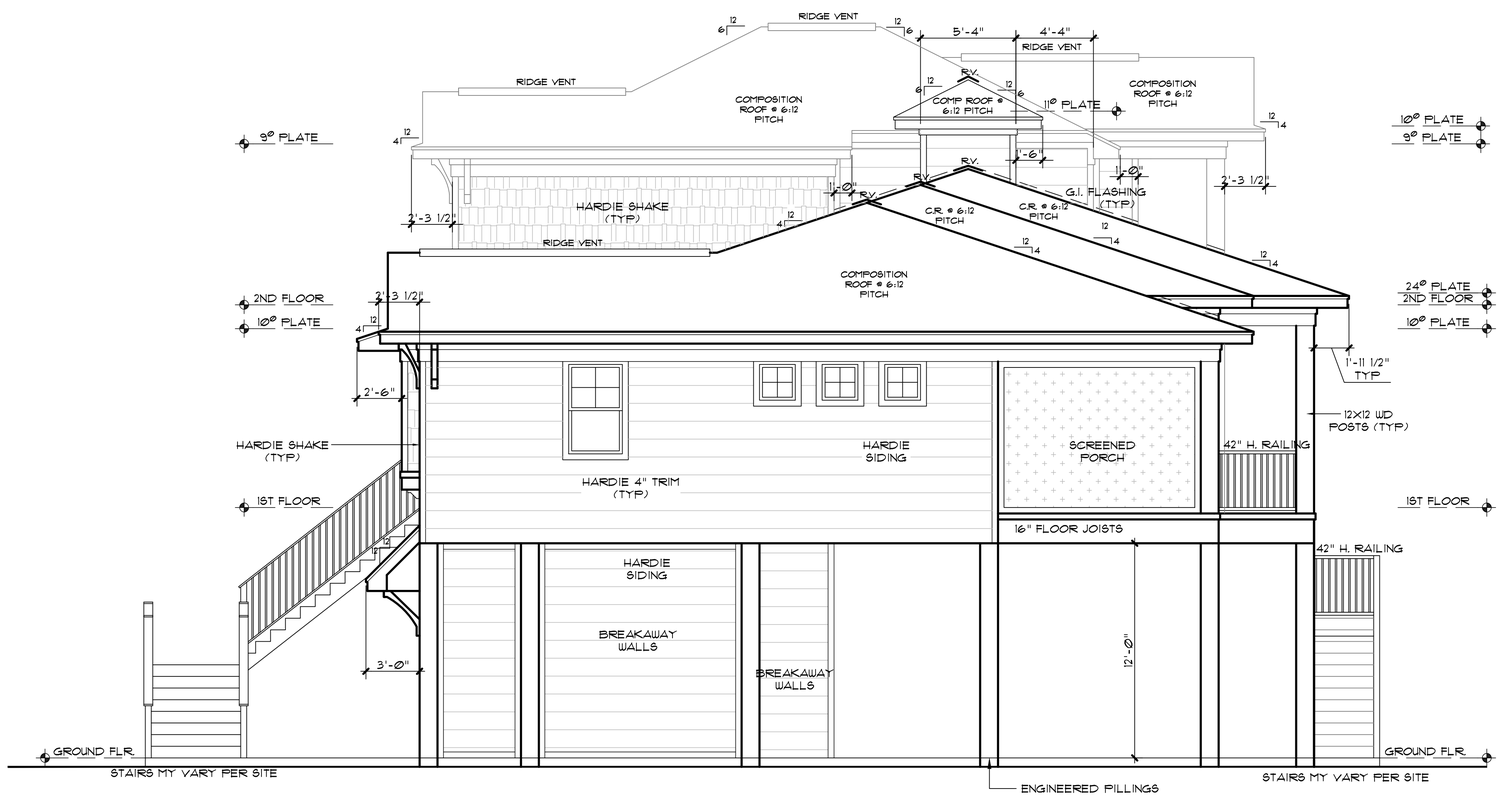

RIGHT ELEVATION

SCALE: 1/4" = 1'-0"

THE GENERAL CONTRACTOR SHALL VERIFY THESE CONSTRUCTION DOCUMENTS WITH THE CURRENT FEMA RESIDENTIAL COASTAL CONSTRUCTION MANUAL. IF ANY DISCREPANCY OCCURS PLEASE CONTACT MARK W. TODD ARCHITECTS, INC.

THE CONSTRUCTION OF THESE PLANS SHALL COMPLY WITH THE PROVISIONS SET FORTH IN THE INTERNATIONAL RESIDENTIAL CODE 2015, AND SHALL ALSO COMPLY WITH LOCAL BUILDING CODES.

REGISTERED ARCHITECT
MARKHAM W. TODD
12180
STATE OF TEXAS
EXP. 12/31/20
4/22/2020

© COPYRIGHT
MARK W. TODD • ARCHITECTS, INC.
THESE DRAWINGS AND SPECIFICATIONS ARE THE PROPERTY AND COPYRIGHT OF THE ARCHITECT AND SHALL NOT BE USED ON ANY OTHER WORK EXCEPT BY AGREEMENT OF THE ARCHITECT. WRITTEN DIMENSIONS TAKE PRECEDENCE OVER SCALED DIMENSIONS AND DISCREPANCIES SHALL BE VERIFIED ON THE JOBSITE. ANY DISCREPANCIES SHALL BE BROUGHT TO THE ATTENTION OF THE ARCHITECT PRIOR TO COMMENCEMENT OF THE WORK.

Mark W. Todd • Architects, Inc.
Architects • Planners • Consultants
1440 Lake Front Circle, Ste. 120
The Woodlands, Texas 77380
(281) 363-2593
FAX (281) 367-9053

A CUSTOM HOME FOR:
BLAKE
MOAK
INDIAN BEACH
LOT: 60 BLK: 1 SECT: 4

Project #	170318R
Date	4/22/2020
Scale	1/4" = 1'-0"
Dwn. By	AA/DB
Ckd. By	LLM

Revisions
1 7/16/19
2

A-7

1 KITCHEN
2 KITCHEN
3 KITCHEN
4 KITCHEN
5 KITCHEN
6 KITCHEN
6a KITCHEN
7 UTILITY
8 MASTER BATH
9 MASTER BATH
10 BATH 2
11 BATH 3
12 BATH 3
13 BUNK ROOM
14 BATH 4

INTERIOR ELEVATIONS

SCALE: 1/4" = 1'-0"

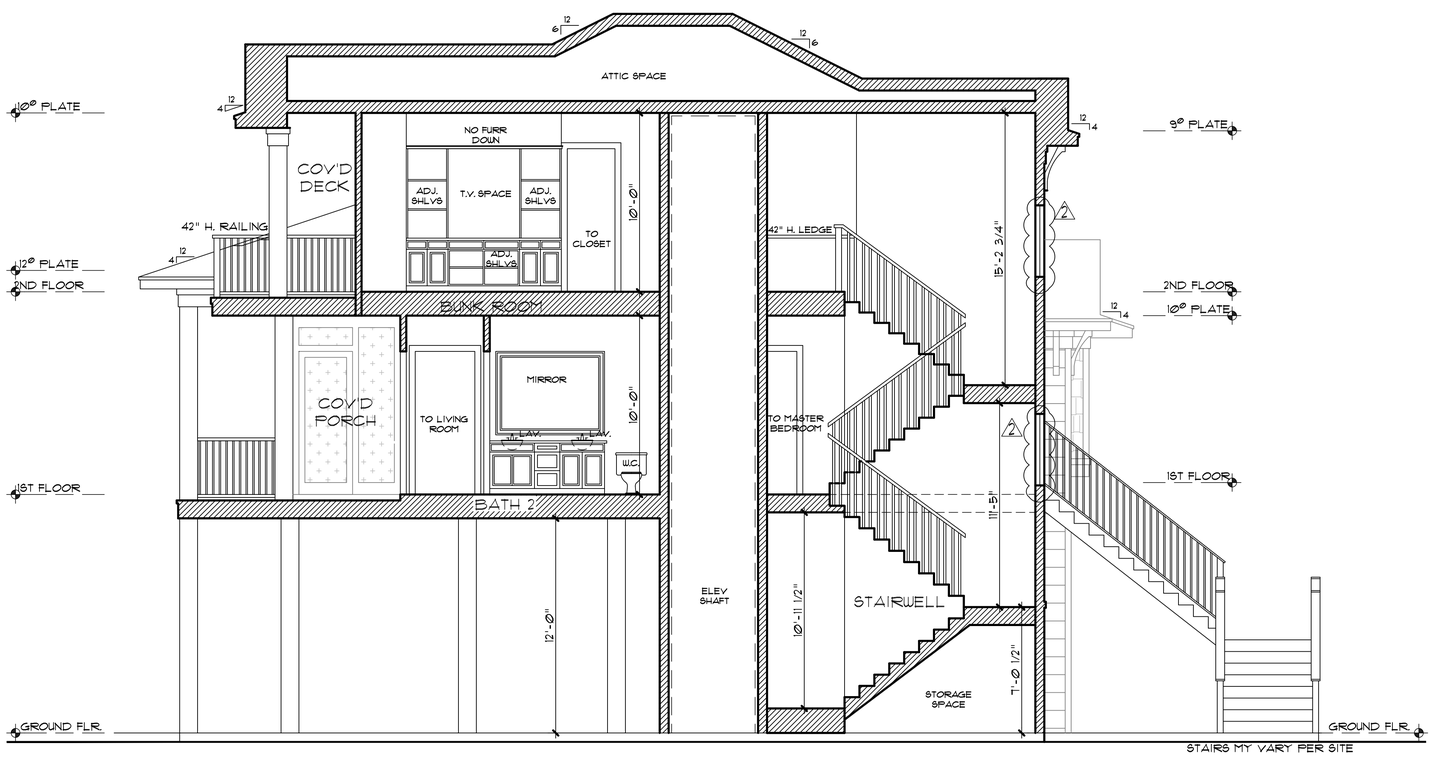

SECTION-A

SCALE: 1/4" = 1'-0"

THE GENERAL CONTRACTOR SHALL VERIFY THESE CONSTRUCTION DOCUMENTS WITH THE CURRENT FEMA RESIDENTIAL COASTAL CONSTRUCTION MANUAL. IF ANY DISCREPANCY OCCURS PLEASE CONTACT MARK W. TODD ARCHITECTS, INC.

THE CONSTRUCTION OF THESE PLANS SHALL COMPLY WITH THE PROVISIONS SET FORTH IN THE INTERNATIONAL RESIDENTIAL CODE 2015, AND SHALL ALSO COMPLY WITH LOCAL BUILDING CODES.

REGISTERED ARCHITECT
MARK WILLIAM TODD
12180
STATE OF TEXAS
EXP. 12/31/20
4/22/2020

© COPYRIGHT
MARK W. TODD • ARCHITECTS, INC.
THESE DRAWINGS AND SPECIFICATIONS ARE THE PROPERTY AND COPYRIGHT OF MARK W. TODD ARCHITECT AND SHALL NOT BE USED ON ANY OTHER WORK EXCEPT BY AGREEMENT OF THE ARCHITECT. WRITTEN DIMENSIONS TAKE PRECEDENCE OVER SCALED DIMENSIONS AND DISCREPANCIES SHALL BE BROUGHT TO THE ATTENTION OF THE ARCHITECT PRIOR TO COMMENCEMENT OF THE WORK.

Mark W. Todd • Architects, Inc.
Architects • Planners • Consultants
1440 Lake Front Circle, Ste. 120
The Woodlands, Texas 77380
(281) 363-2593
FAX (281) 367-9053

A CUSTOM HOME FOR:
BLAKE
MOAK
INDIAN BEACH
LOT: 60 BLK: 1 SECT: 4

Project #	170318R
Date	4/22/2020
Scale	1/4" = 1'-0"
Dwn. By	AA/DB
Ckd. By	LLM

Revisions
1
2 8/15/19

A-11

NOTE TO CONTRACTOR/OWNER

ITS OWNER/CONTRACTOR RESPONSIBILITY TO CALL THE OFFICE AT 409-741-8741 FOR ALL INSPECTIONS

INSPECTION SHEET

THIS CONSTRUCTION SET MUST BE ON SITE AT TIME OF ALL INSPECTIONS.

ADDITIONAL CHARGES MAY OCCUR IF THE CONSTRUCTION SET IS NOT ON SITE AT THE TIME OF ALL INSPECTIONS.

SOUTHEAST TEXAS ENGINEERING AND INSPECTIONS MUST BE CALLED FOR EACH INSPECTION AND PASS EA. INSPECTION IN ORDER FOR A WPI-8 CERTIFICATE TO BE ISSUED. THIS CONSTRUCTION SET MUST BE ONSITE IN ORDER TO CONDUCT ALL INSPECTIONS. ADDITIONAL CHARGES MAY OCCUR IF CONSTRUCTION SET IS NOT ONSITE DURING TIME OF INSPECTION.

RECEIPTS FOR ALL MATERIALS (DOORS, WINDOWS, CLIPS, STRAPS, NAILS, ROOFING MATERIAL, ETC...) SHALL BE PROVIDED TO SOUTHEAST TEXAS ENGINEERING AND INSPECTIONS PRIOR TO CERTIFICATION

- PILE INSTALLATION
- 1ST FLOOR CLIP AND STRAP
- 2ND FLOOR CLIP AND STRAP
- SHEATH AND DECK
- DOORS AND WINDOWS AT TIME OF INSTALLATION
  (OWNER/CONTRACTOR TO SUPPLY SETE W/ ALL WINDOW/DOOR INFORMATION PRIOR TO SETE DOING INSPECTION)
- SIDING AT TIME OF INSTALLATION AND WINDOW COVERINGS IF NOT IMPACT
  (OWNER/CONTRACTOR TO SUPPLY SETE W/ ALL SIDING INFORMATION PRIOR TO SETE DOING INSPECTION)
- UNDERLAYMENT AND ROOF SHINGLES AT TIME OF INSTALLATION
  (OWNER/CONTRACTOR TO SUPPLY SETE W/ ALL ROOF INFORMATION PRIOR TO SETE DOING INSPECTION)
- A/C ANCHORED, BREAKAWAY WALLS (FINAL)

TABLE OF CONTENTS

TITLE	SHT
INSPECTION SHEET	S1OF20
GENERAL REQUIREMENTS	S2OF20
COMPONENT AND CLADDING REQUIREMENTS	S2-1OF20
DRAINAGE PLAN	S2-2OF20
FRONT/RIGHT ELEVATION VIEWS	S3OF20
REAR/LEFT ELEVATION VIEWS	S3-1OF20
PILE FOUNDATION LAYOUT	S4OF20
CONCRETE FOUNDATION LAYOUT	S4-1OF20
STRINGER/JOIST LAYOUT	S5OF20
APB BOLT TOGETHER DETAIL	S5-1OF20
1ST FLOOR CEILING JOIST LAYOUT	S6OF20
2ND FLOOR CEILING JOIST LAYOUT	S6-1OF20
SHEARWALL LAYOUTS	S7OF20
ROOF LAYOUT	S8OF20
PILE/CONCRETE FOUNDATION DETAILS	S9OF20
STRINGER/JOIST DETAILS	S10OF20
TYPICAL WALL DETAILS	S10-1OF20
PORCH POST AND HOLDOWN BLOCK DETAILS	S11OF20
CLIP/STRAP DETAILS	S12OF20
SHEARWALL DETAILS	S13OF20
PORCH DETAILS	S14OF20
ROOF DETAILS1	S15OF20
ROOF DETAILS2	S16OF20
ROOF DETAILS3	S17OF20
BREAKAWAY WALL DETAILS	S18OF20
STAIR/HANDRAIL DETAILS	S19OF20
SIDING DETAILS	S20OF20
TRUSS REQUIREMENTS	S20-1OF20

ATTENTION OWNER/CONTRACTOR

ALL INSULATION, DOORS, WINDOWS FOR ENERGY PURPOSES SHALL BE INSPECTED BY OTHERS THAT ARE LICENSED AND APPROVED TO CONDUCT THIS TYPE OF WORK IN THE STATE OF TEXAS. IT IS UP TO THE HOWEOWNER/CONTRACTOR TO SUPPLY BLOWER TESTS TO LOCAL MUNICIPALITIES IF REQUIRED BY BUILDING OFFICIAL.

ATTENTION OWNER/CONTRACTOR

OWNER/CONTRACTOR RESPONSIBILITY TO INSTALL ALL EXTERIOR COMPONENTS AND CLADDING PER TDI INSTALLATION INSTRUCTIONS FOR THE APPROPRIATE WIND PRESSURES STATED IN THIS SET OF ENGINEERED DRAWINGS.

FIND ALL TDI INSTALLATION INSTRUCTIONS AT THE WEBSITE BELOW:

http://www.tdi.texas.gov/wind/prod/index.html

WES BUCHHORN, PE
TIM BUCHHORN, PE

THIS DRAWING SET SHALL NOT BE USED FOR PERMITTING OR CONSTRUCTION UNLESS AN ENGINEERING SEAL FROM SOUTHEAST TEXAS ENGINEERING AND INSPECTIONS IS AFFIXED

FIRM REGISTRATION #13882

NO.	ISSUE / REVISION	DATE
	ORIGINAL RELEASE	8-14-19

SOUTHEAST TEXAS ENGINEERING AND INSPECTIONS, LLC
(OFFICE) 409-741-8741
(WES) 409-795-1415
(TIM) 409-795-1181
8017 HARBORSIDE DRIVE,
GALVESTON, TX 77554
SOUTHEASTTEXASENGINEERING.COM

ENGINEER STAMP AND SIGNATURE

STATE OF TEXAS
WESLEY ALLAN BUCHHORN
108508
LICENSED
PROFESSIONAL ENGINEER

8-14-19

NEW RESIDENCE
OWNER: BLAKE MOAK
18227 EAST DAVACA
INDIAN BEACH
GALVESTON, TEXAS

TITLE: INSPECTION SHEET	
DATE: AUG. 14, 2019	
SCALE: NTS	SHEET: S1 OF 20

GENERAL STRUCTURAL NOTES:

DESIGN CONDITIONS:
DEAD AND LIVE LOADS PER IRC 2012, ASCE7–10
WIND CONDITION 150 MPH, 3–SEC GUST (ULTIMATE)
EXPOSURE C, IMPORTANCE 1
(WINDSTORM) ASCE7–05, 130 MPH, EXP. 'C'
DECK LIVE LOAD = 40 PSF, DL=10 PSF
FLOOR LIVE LOAD=40 PSF, DL=10 PSF
ROOF LIVE LOAD= 20 PSF, DL=10 PSF
CEILING LIVE LOAD (LIMITED STORAGE)=20 PSF
CEILING DEAD LOAD = 5 PSF
GUARDRAIL – 50 LB./FT., 200 LB. PT LOAD
STAIR TREAD DESIGN – LL=40 PSF OR
LL=300 LB POINT LOAD ANYWHERE. DL=10 PSF

SOUTHEAST TEXAS ENGINEERING AND INSPECTIONS IS NOT RESPONSIBLE FOR ANY ELECTRICAL OR PLUMBING. SOUTHEAST TEXAS ENGINEERING AND INSPECTIONS IS ONLY RESPONSIBLE FOR THE STRUCTURAL ENGINEERING ONLY.

FRAMING LUMBER:
#2 SYP OR BETTER, UNO
ALL TOP PLATE AND SILL PLATES TO BE SYP#1
ALL SILL PLATES ARE TO BE TREATED
ALL EXPOSED LUMBER SHALL BE TREATED
ALL LUMBER IN DIRECT CONTACT W/ SALTWATER TO BE TREATED (2.5CCA)
ALL LUMBER IN DIRECT CONTACT W/ GROUND TO BE TREATED (.6CCA)
ALL EXTERIOR STUDS TO BE DOUBLED FOR 1ST 4'–0" WITHIN ALL EXTERIOR CORNERS

COMPONENTS AND CLADDING PRESSURES:
WITHIN 4' OF CORNERS – 60 PSF
OUTSIDE OF 4' FROM CORNERS – 50 PSF
WINDOWS/DOORS W/ GLAZINGS SHALL BE IMPACT
RESISTANT OR COVERED WITH AN APPROVED
PRODUCT THAT MEETS THE WINDBORNE RESISTANCE CRITERIA.
PLYWOOD COVERINGS CAN ONLY BE USED IN ACCORDANCE WITH 2006 TEXAS WIND PROVISIONS.
SIDING INSTALLED PER TDI INSTALLATION INSTRUCTIONS AS APPLICABLE
BRICK TIES INSTALLED 16" O.C., 12" AROUND ALL OPENINGS AS APPLICABLE
ALL EXPOSED FASTENERS AND WINDOWS/DOORS/SIDING/ROOF FASTENERS SHALL BE HDG OR SS

ENGINEER NOTES OVERRIDE ARCHITECTURAL NOTES

SHEATHING REQUIREMENTS:
FULLY WRAP HOUSE IN 5/8" PLYWOOD
4" X 8" NAILING, UNO, 10D NAILS (.131 DIA), BLOCKING REQUIRED
ROOF DECKING SHALL BE 5/8" PLYWOOD
4" X 6" NAILING, 10D NAILS (.131 DIA.), BLOCKING NOT REQUIRED
OVERHANGS
3" X 4" NAILING, 10D NAILS (.131 DIA.) BLOCKING REQUIRED
SOFFITS NAILED 4" O.C. W/ 8d NAILS (.113)

CLIPS AND STRAPS, UNLESS OTHERWISE NOTED:
PART NOS LISTED ARE SIMPSON.
LSTA 24 RIDGE STRAPS
(1) H2.5A CLIPS FROM RAFTER TO TOP PLATE W/ (3) 10D TOE–NAILS (30°), THEN
(1) H2.5A CLIP FROM TOP PLATE TO STUD W/ (3) 10D TOE–NAILS (30°) OTHER FRAMING
CONNECTORS AS SPECIFIED IN THIS DWG SET
ALL METAL FRAMING CONNECTORS IN CONTACT WITH TREATED LUMBER MUST BE "Z" TYPE
CONSULT MANUFACTURER'S INSTRUCTIONS FOR NAIL SIZES. FILL ALL HOLES UNO.

ROOFING MATERIALS:
ROOFING SHINGLES SHALL BE USED WHICH ARE STATED BY THE MANUFACTURER AS BEING
COMPLIANT WITH ASTM D 3161, MODIFIED TO USE A WIND SPEED OF 110 MPH.
INSTALLATION SHALL BE PER THE MANUFACTURER'S INSTRUCTIONS, WITH PARTICULAR
ATTENTION TO STARTER
COURSE INSTALLATION, NAIL LINES & PATTERNS. NAIL GUNS ARE STRONGLY DISCOURAGED.
HAND NAILED APPLICATION IS PREFERABLE

SPECIAL NOTES:
1. CARE MUST BE TAKEN TO ENSURE NAILS ARE NOT OVER DRIVEN IN SHEATHING, DECKING, SIDING AND SIMILAR APPLICATIONS.
2. ALL EXPOSED LUMBER SHALL BE TREATED.
3. THE ENGINEER–OF–RECORD MUST BE CONTACTED WHEN CONFLICTS IN STRUCTURAL REQUIREMENTS ARE DISCOVERED. DO NOT PROCEED UNTIL RESOLUTION OF CONFLICTS ARE COMPLETE.
4. ALL PORCH BEAMS SHALL NOT SIT ON TOP OF PORCH POST. ALL PORCH POSTS MUST BE NOTCHED AS SHOWN ON PLANS AND BEAM MUST BE BOLTED TO POST AS SHOWN ON PLANS. NO EXCEPTIONS.
5. ALL WOOD BELOW BFE MUST BE TREATED.
6. ALL 2X6 WALL HEADERS TO BE (3) 2X12'S (UNO) (2) 2X12'S FOR 2X4 WALLS.
7. FLOOR DECKING TO BE 1 $\frac{1}{8}$" NAILED USING 10D NAILS WITH A 4"X6" NAIL PATTERN.
8. ALL DIMENSIONS ARE APPROXIMATE AND SHALL BE FIELD VERIFIED BY CONTRACTOR/OWNER.
9. ALL BREAKAWAY WALLS TO BREAKAWAY AT 20 PSF DUE TO HYDRODYNAMIC LOADS (FIELD VERIFY).
10. (LIFTS BY OTHERS) – The connection details are for WIND ONLY. The drawing/ analysis does not assess water loads, live loads, dead loads, or dynamic loads. These additional loads will need to be done by others.

NOTE: CONTACT ENGINEER IMMEDIATELY FOR CLARIFICATIONS WHEN CONFLICTING STRUCTURAL REQUIREMENTS ARE DISCOVERED

NAILING SCHEDULE, UNO ON PLANS

(WHICHEVER SUPERCEDES)

JOINT DESCRIPTION		NUMBER OF COMMON NAILS	NUMBER OF BOX NAILS	NAIL SPACING
WALL FRAMING				
Top plate to top plate (face-nailed)		2-10d	2-10d	per 4 inches
Top plates at intersections (face-nailed)		5-10d	5-10d	joints - each side
Stud to stud (face-nailed)		2-10d	2-10d	8"o.c.
Header to header (face-nailed)		2-10d	2-10d	8"o.c. along edges
Top or bottom plate to stud (end-nailed)		3 -10d	3 -10d	per stud
Bottom plate to floor joist, bandjoist, endjoist or blocking (face-nailed)		3-10d	3-10d	per 6"
FLOOR FRAMING				
Joist to sill, top plate or girder (toe-nailed)		4-10d	4-10d	per joist
Bridging to joist (toe-nailed)		2-10d	2-10d	each end
Blocking to joist (toe-nailed)		2-10d	2-10d	each end
Blocking to sill or top plate (toe-nailed)		3-10d	4-10d	each block
Ledger strip to beam (face-nailed)		3-10d	4-10d	each joist
Joist on ledger to beam (toe-nailed)		3-8d	3-10d	per joist
Band joist to joist (end-nailed)		5-10d	5-10d	per joist
Band joist to sill or top plate (toe-nailed)		2-10d	3-10d	8" o.c.
CEILING SHEATHING				
Gypsum wallboard		5d coolers	5d coolers	7"edge/7"field
WALL SHEATHING				
PLYWOOD/OSB		10d	10d	3"edge/8"field
FLOOR SHEATHING				
Structural panels	1" or less	10D	10d	3"edge/6"field
	greater than 1"	10d	10d	3"edge/6"field
Diagonal board sheathing	1"x6" or 1"x8"	2-10d	2-10d	per support
	1"x10" or wider	3-10d	3-10d	per support
ROOF FRAMING				
Rafter to top plate (toe-nailed)		4 -10d	4 -10d	per rafter
Ceiling joist to top plate (toe-nailed)		4 -10d	4 -10d	per joist
Ceiling joist to parallel rafter (face-nailed)		7 -10d	7 -10d	each lap
Ceiling joist laps over partitions (face-nailed)		7 -10d	7 -10d	each lap
Collar tie to rafter (face-nailed)		7 -10d	7 -10d	per tie
Blocking to rafter (toe-nailed)		2-10d	2-10d	each end
Rim board to rafter (end-nailed)		3-10d	3-10d	each end
ROOF SHEATHING				
PLYWOOD/OSB		10D	10d	4"edge/6"field
Diagonal board sheathing	1"x6" or 1"x8"	2-10d	2-10d	per support
	1"x10" or wider	3-10d	3-10d	per support

ALL MEMBERS EXPOSED TO THE WEATHER SHALL BE TREATED.

CODE COMPLIANT LIST
– R315.3 WHERE WORK REQUIRING A PERMIT OCCURS IN EXISTING DWELLINGS THAT HAVE ATTACHED GARAGES OR IN EXISTING DWELLINGS WITHIN WHICH FUEL-FIRED APPLIANCES EXIST, CARBON MONOXIDE ALARMS SHALL BE PROVIDED.
– R314.3.1 WHEN ALTERATIONS, REPAIRS OR ADDITIONS REQUIRING A PERMIT OCCUR, OR WHEN ONE OR MORE SLEEPING ROOMS ARE ADDED OR CREATED IN EXISTING DWELLINGS, THE INDIVIDUAL DWELLING UNIT SHALL BE EQUIPPED WITH SMOKE ALARMS LOCATED AS REQUIRED FOR NEW DWELLINGS. ALL NEW CONSTRUCTION SHALL HAVE HARD-WIRED SMOKE ALARMS. REPLACEMENT OF ROOFING, SIDING, WINDOWS AND DOORS ARE EXEMPT FROM THESE REQUIREMNTS.

WOOD TREATMENT
WHERE LUMBER AND/OR PLYWOOD IS CUT OR DRILLED AFTER TREATMENT, THE TREATED SURFACE SHALL BE FIELD TREATED WITH COPPER NAPHTHENATE, THE CONCENTRATION OF WHICH SHALL CONTAIN A MINIMUM OF 2 PERCENT COPPER MEATL, BY REPEATED BRUSHING, DIPPING OR SOAKING UNTIL THE WOOD ABSORBS NO MORE PRESERVATIVE.

IT'S OWNER/CONTRACTOR RESPONSIBILITY TO CHECK WITH LOCAL MUNICIPALITIES FOR MINIMUM EGRESS REQUIREMENTS FOR WINDOW CLEAR SPAN OPENINGS. OPENINGS ON THE DRAWINGS ARE PER OWNER/CONTRACTOR REQUEST BUT SHALL ALSO MEET LOCAL MUNICIPALITY EGRESS REQUIREMENTS. SETE TAKES NO RESPONSIBILITY, WINDOW OPENING SHALL BE GREATER THAN 1' FROM FINISHED FLOOR HEIGHT, IF NOT, FALL PROTECTION PROVIDED BY OTHERS

WES BUCHHORN, PE
TIM BUCHHORN, PE

THIS DRAWING SET SHALL NOT BE USED FOR PERMITTING OR CONSTRUCTION UNLESS AN ENGINEERING SEAL FROM SOUTHEAST TEXAS ENGINEERING AND INSPECTIONS IS AFFIXED

FIRM REGISTRATION #13882

NO.	ISSUE / REVISION	DATE
	ORIGINAL RELEASE	8-14-19

SOUTHEAST TEXAS ENGINEERING AND INSPECTIONS, LLC
(OFFICE) 409-741-8741
(WES) 409-795-1415
(TIM) 409-795-1181
8017 HARBORSIDE DRIVE,
GALVESTON, TX 77554
SOUTHEASTTEXASENGINEERING.COM

ENGINEER STAMP AND SIGNATURE

STATE OF TEXAS
WESLEY ALLAN BUCHHORN
108508
LICENSED
PROFESSIONAL ENGINEER

8-14-19

NEW RESIDENCE
OWNER: BLAKE MOAK
18227 EAST DAVACA
INDIAN BEACH
GALVESTON, TEXAS

TITLE: GENERAL REQUIREMENTS

DATE: AUG. 14, 2019

SCALE: NTS

SHEET: S2 OF 20

NOTE: CONTACT ENGINEER IMMEDIATELY FOR CLARIFICATIONS WHEN CONFLICTING STRUCTURAL REQUIREMENTS ARE DISCOVERED

WINDOW AND DOOR PRESSURE REQUIREMENTS		SIDING AND OTHER MATERIAL PRESSURE REQUIREMENTS
WITHIN 5' OF CORNERS	60 PSF	
FARTHER THAN 5' OF CORNERS	50 PSF	60 PSF

Roof Pressures according to ASCE 7-05: (10 sq. ft. areas)

Field Zone: +27 psf, -42 psf
Edge Zone: +27 psf, -73 psf (Edge zone is Within 5' from the edge)
Corner Zone: +27 psf, -107 psf (Corner zone is within 5' from all corners)

Wall Sheathing/Roof decking:

Wall Sheathing and roof decking shall be per plan unless thicker Plywood/OSB Substrate is required by manufacturer/TDI product evaluation for all exterior Siding and Roof components.

Brick Ties:

All brick ties and fasteners shall either be stainless steel and meet ASTM A167, hot dipped galvanized after fabrication and meet ASTM A123 or ASTM A153 or hot-dip galvanized or galvannealed prior to fabrication and meet ASTM A653.

Fasteners:

All fasteners shall either be stainless steel and meet ASTM A167, hot dipped galvanized after fabrication and meet ASTM A123 or ASTM A153 or hot-dip galvanized or galvannealed prior to fabrication and meet ASTM A653.
(This also applies to lathe for stucco applications.) (Zinc coatings can be used in Inland I and Inland II areas ONLY.)

Components and Cladding Items:

Windows: *All windows shall meet the pressures specified in this document. All windows shall either have a valid test report from a 3rd party laboratory or have a valid product evaluation that has been approved by the Texas Department of Insurance (http://www.tdi.texas.gov/wind/prod/index.html). Please send all test reports or product evaluation to SETE for review PRIOR to ordering materials.*

Doors *: All doors shall meet the pressures specified in this document. All doors shall either have a valid test report from a 3rd party laboratory or have a valid product evaluation that has been approved by the Texas Department of Insurance (http://www.tdi.texas.gov/wind/prod/index.html). Please send all test reports or product evaluation to SETE for review PRIOR to ordering materials.*

Roofing: *All roofing materials shall meet the pressures specified in this document. All roofing components shall either have a valid test report from a 3rd party laboratory or have a valid product evaluation that has been approved by the Texas Department of Insurance (http://www.tdi.texas.gov/wind/prod/index.html). Please send all test reports or product evaluation to SETE for review PRIOR to ordering materials.*

Siding: *All siding shall meet the pressures specified in this document. All siding shall either have a valid test report from a 3rd party laboratory or have a valid product evaluation that has been approved by the Texas Department of Insurance (http://www.tdi.texas.gov/wind/prod/index.html). Please send all test reports or product evaluation to SETE for review PRIOR to ordering materials.*

WES BUCHHORN, PE
TIM BUCHHORN, PE

THIS DRAWING SET SHALL NOT BE USED FOR PERMITTING OR CONSTRUCTION UNLESS AN ENGINEERING SEAL FROM SOUTHEAST TEXAS ENGINEERING AND INSPECTIONS IS AFFIXED

FIRM REGISTRATION #13882

NO.	ISSUE / REVISION	DATE
	ORIGINAL RELEASE	8-14-19

SOUTHEAST TEXAS ENGINEERING AND INSPECTIONS, LLC
(OFFICE) 409-741-8741
(WES) 409-795-1415
(TIM) 409-795-1181
8017 HARBORSIDE DRIVE,
GALVESTON, TX 77554
SOUTHEASTTEXASENGINEERING.COM

ENGINEER STAMP AND SIGNATURE

STATE OF TEXAS
WESLEY ALLAN BUCHHORN
108508
LICENSED
PROFESSIONAL ENGINEER

8-14-19

NEW RESIDENCE
OWNER: BLAKE MOAK
18227 EAST DAVACA
INDIAN BEACH
GALVESTON, TEXAS

TITLE: COMPONENT AND CLADDING

DATE: AUG. 14, 2019

SCALE: NTS

SHEET: S2-1 OF 20

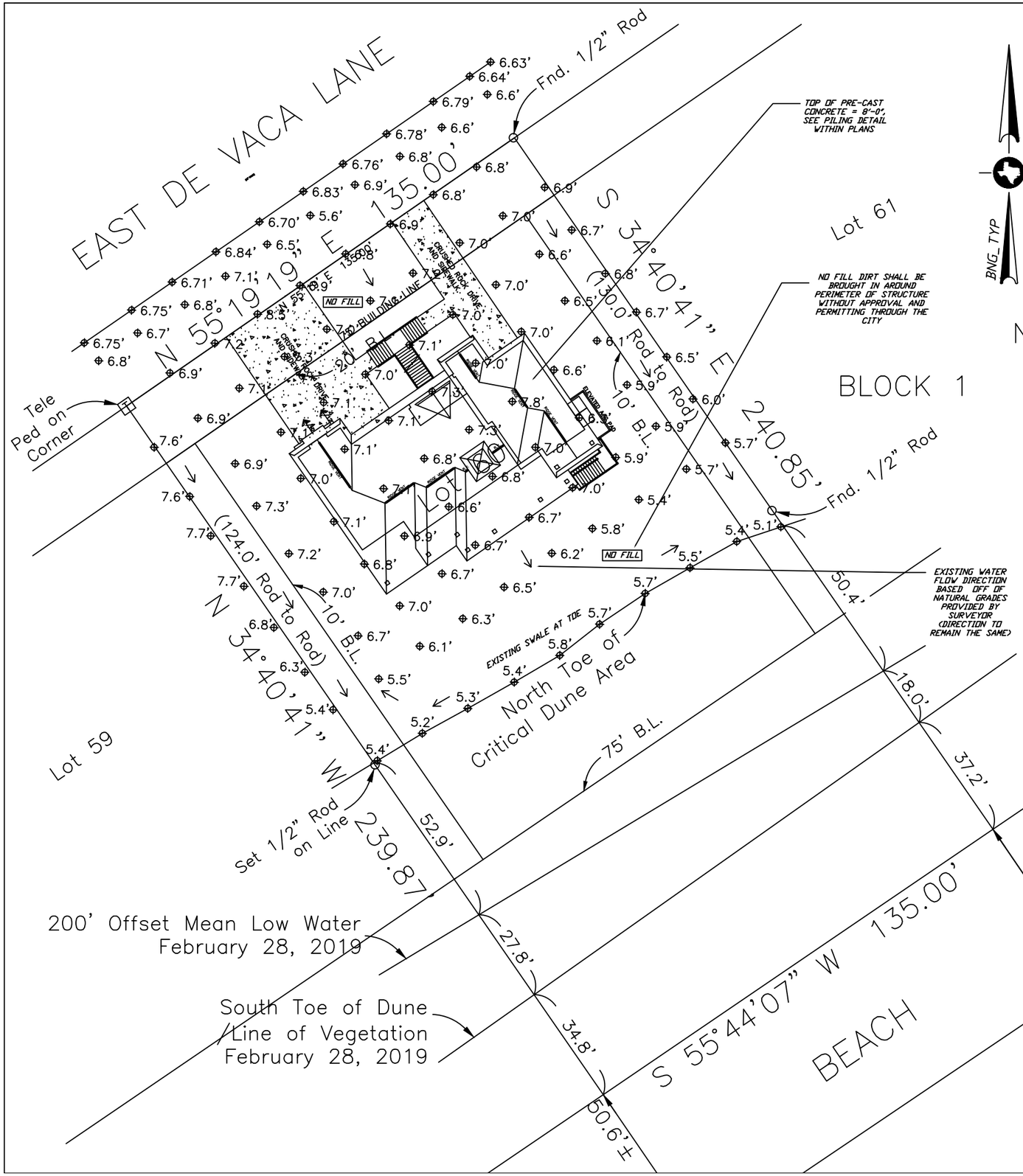

ALL EXISTING FLOWS SHALL NOT BE ALTERED UNLESS APPROVED BY CITY

PROVIDED BY SURVEYOR TO ENGINEER FOR CITY DRAINAGE APPROVAL:

- Existing and Post Construction spot elevations on a 15 foot grid, including lot corners, along property boundaries, and around building perimeters.
- All building footprints, dimensions, easements, and main floor elevations.
- Existing and proposed surface treatment throughout property (swales, paving, landscaping, fence, gravel, etc.)
- Drainage is conveyed safely to the ROW, drainage easement, or to the Bay without impacting the public.
- Subsurface site drainage required for sites larger than 15,000 square feet or having a frontage wider than 150-ft.

STATEMENTS AND VERBIAGE PER CITY REQUIREMENT:
MAXIMUM 12 INCH RISE IN ELEVATION (STRUCTURE FOOTPRINT ONLY) WITH FILL IN VE ZONES PER FEMA REQUIREMENTS. FILL SHALL NOT BE USED TO SUPPORT STRUCTURES. NO TAPER IS ALLOWED UNLESS APPROVED BY CITY PRIOR TO CONSTRUCTION.

IF NO DRAINAGE PLAN AND NO CHANGES TO EXISTING GRADES:
NO FILL SHALL BE BROUGHT ONSITE, NO CHANGES SHALL BE MADE TO EXISTING GRADING, AND POST DEVELOPMENT DRAINAGE SHALL NOT IMPACT THE PUBLIC.
CONTRACTOR/BUILDER/OWNER SHALL BE 100% LIABLE FOR DEVIATION FROM THESE REQUIREMENTS BASED ON CITY INSPECTION.

IF THERE IS AN EXISTING SUBDIVISION DRAINAGE PLAN AND SITE TOPOGRAPHY IS NOT BEING ALTERED:
CONTRACTOR/BUILDER/OWNER RESPONSIBLE TO REQUEST PLAN TO CITY. APPROVED DRAINAGE PLANS ONLINE PER CITY AT HTTP://WWW.GALVESTONTX.GOV/537/PUBLIC-RECORDS
CONTRACTOR/BUILDER/OWNER RESPONSIBLE TO ATTACH THE APPROVED DRAINAGE PLAN TO THE PERMIT APPLICATION.
NO FILL SHALL BE BROUGHT TO SITE, NO CHANGES SHALL BE MADE TO EXISTING GRADING OR DRAINAGE PLAN, AND THERE SHALL BE NO DRAINAGE IMPACT TO NEIGHBORHOOD PROPERTIES.
CONTRACTOR/BUILDER/OWNER SHALL BE 100% LIABLE FOR DEVIATION FROM THESE REQUIREMENTS BASED ON CITY INSPECTION.

WES BUCHHORN, PE
TIM BUCHHORN, PE

THIS DRAWING SET SHALL NOT BE USED FOR PERMITTING OR CONSTRUCTION UNLESS AN ENGINEERING SEAL FROM SOUTHEAST TEXAS ENGINEERING AND INSPECTIONS IS AFFIXED

FIRM REGISTRATION #13882

NO.	ISSUE / REVISION	DATE
	ORIGINAL RELEASE	8-14-19

SOUTHEAST TEXAS ENGINEERING AND INSPECTIONS, LLC
(OFFICE) 409-741-8741
(WES) 409-795-1415
(TIM) 409-795-1181
8017 HARBORSIDE DRIVE, GALVESTON, TX 77554
SOUTHEASTTEXASENGINEERING.COM

ENGINEER STAMP AND SIGNATURE

STATE OF TEXAS
WESLEY ALLAN BUCHHORN
108508
LICENSED
PROFESSIONAL ENGINEER

8-14-19

NEW RESIDENCE
OWNER: BLAKE MOAK
18227 EAST DAVACA
INDIAN BEACH
GALVESTON, TEXAS

TITLE: DRAINAGE PLAN

DATE: AUG. 14, 2019

SCALE: NTS

SHEET: S2-2 OF 20

FRONT ELEVATION VIEW

ALL WALLS BELOW BFE SHALL BE BREAKAWAY

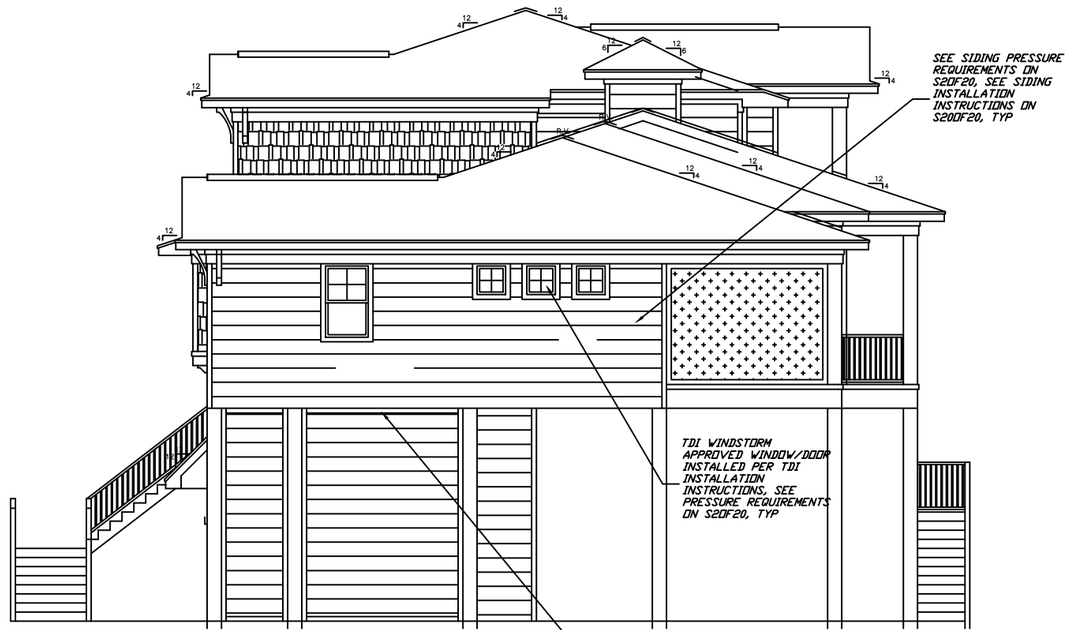

RIGHT ELEVATION VIEW

ALL WALLS BELOW BFE SHALL BE BREAKAWAY

WES BUCHHORN, PE
TIM BUCHHORN, PE

THIS DRAWING SET SHALL NOT BE USED FOR PERMITTING OR CONSTRUCTION UNLESS AN ENGINEERING SEAL FROM SOUTHEAST TEXAS ENGINEERING AND INSPECTIONS IS AFFIXED

FIRM REGISTRATION #13882

NO.	ISSUE / REVISION	DATE
	ORIGINAL RELEASE	8-14-19

SOUTHEAST TEXAS ENGINEERING AND INSPECTIONS, LLC
(OFFICE) 409-741-8741
(WES) 409-795-1415
(TIM) 409-795-1181
8017 HARBORSIDE DRIVE,
GALVESTON, TX 77554
SOUTHEASTTEXASENGINEERING.COM

ENGINEER STAMP AND SIGNATURE

STATE OF TEXAS
WESLEY ALLAN BUCHHORN
108508
LICENSED
PROFESSIONAL ENGINEER

8-14-19

NEW RESIDENCE
OWNER: BLAKE MOAK
18227 EAST DAVACA
INDIAN BEACH
GALVESTON, TEXAS

TITLE
FRONT/RIGHT ELEVATION VIEWS

DATE
AUG. 14, 2019

SCALE
$\frac{3}{32}$"=1'-0"

SHEET
S3 OF 20

REAR ELEVATION VIEW

ALL WALLS BELOW BFE SHALL BE BREAKAWAY

LEFT ELEVATION VIEW

ALL WALLS BELOW BFE SHALL BE BREAKAWAY

WES BUCHHORN, PE
TIM BUCHHORN, PE

THIS DRAWING SET SHALL NOT BE USED FOR PERMITTING OR CONSTRUCTION UNLESS AN ENGINEERING SEAL FROM SOUTHEAST TEXAS ENGINEERING AND INSPECTIONS IS AFFIXED

FIRM REGISTRATION #13882

NO.	ISSUE / REVISION	DATE
	ORIGINAL RELEASE	8-14-19

SOUTHEAST TEXAS ENGINEERING AND INSPECTIONS, LLC
(OFFICE) 409-741-8741
(WES) 409-795-1415
(TIM) 409-795-1181
8017 HARBORSIDE DRIVE,
GALVESTON, TX 77554
SOUTHEASTTEXASENGINEERING.COM

ENGINEER STAMP AND SIGNATURE

STATE OF TEXAS
WESLEY ALLAN BUCHHORN
108508
LICENSED
PROFESSIONAL ENGINEER

8-14-19

NEW RESIDENCE
OWNER: BLAKE MOAK
18227 EAST DAVACA
INDIAN BEACH
GALVESTON, TEXAS

TITLE
REAR/LEFT ELEVATION VIEWS

DATE
AUG. 14, 2019

SCALE
$\frac{3}{32}$"=1'-0"

SHEET
S3-1 OF 20

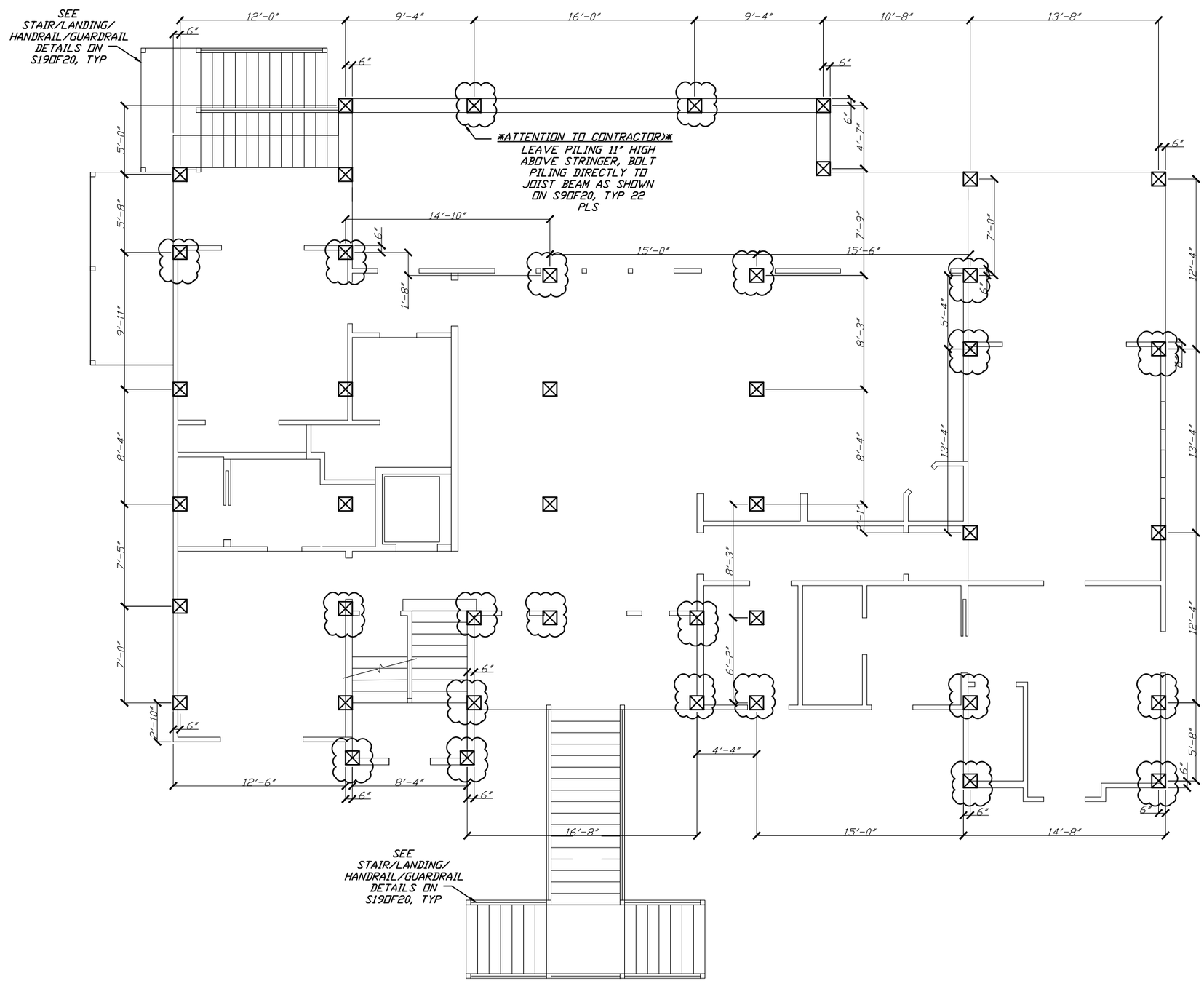

PILE LAYOUT

12"X12" TREATED SYP#2 DENSE/DRIVEN PILING, SEE DETAILS ON S9OF20, TYP 43 PLS, CONTRACTOR VERIFY 22 PILINGS TO BE LEFT 11" HIGHER THAN TOP OF STRINGER FOR BOLTING TPL JOIST (CLOUDED AREAS) ALL WALLS BELOW SHALL BE BREAKAWAY, SEE DETAILS ON S18OF20, 299 FT^2 MAX. ENCLOSURE

WES BUCHHORN, PE
TIM BUCHHORN, PE

THIS DRAWING SET SHALL NOT BE USED FOR PERMITTING OR CONSTRUCTION UNLESS AN ENGINEERING SEAL FROM SOUTHEAST TEXAS ENGINEERING AND INSPECTIONS IS AFFIXED

FIRM REGISTRATION #13882

NO.	ISSUE / REVISION	DATE
	ORIGINAL RELEASE	8-14-19

SOUTHEAST TEXAS ENGINEERING AND INSPECTIONS, LLC
(OFFICE) 409-741-8741
(WES) 409-795-1415
(TIM) 409-795-1181
8017 HARBORSIDE DRIVE,
GALVESTON, TX 77554
SOUTHEASTTEXASENGINEERING.COM

ENGINEER STAMP AND SIGNATURE

STATE OF TEXAS
WESLEY ALLAN BUCHHORN
108508
LICENSED
PROFESSIONAL ENGINEER

8-14-19

NEW RESIDENCE
OWNER: BLAKE MOAK
18227 EAST DAVACA
INDIAN BEACH
GALVESTON, TEXAS

TITLE
PILE FOUNDATION LAYOUT

DATE
AUG. 14, 2019

SCALE
$\frac{1}{8}$"=1'-0"

SHEET
S4 OF 20

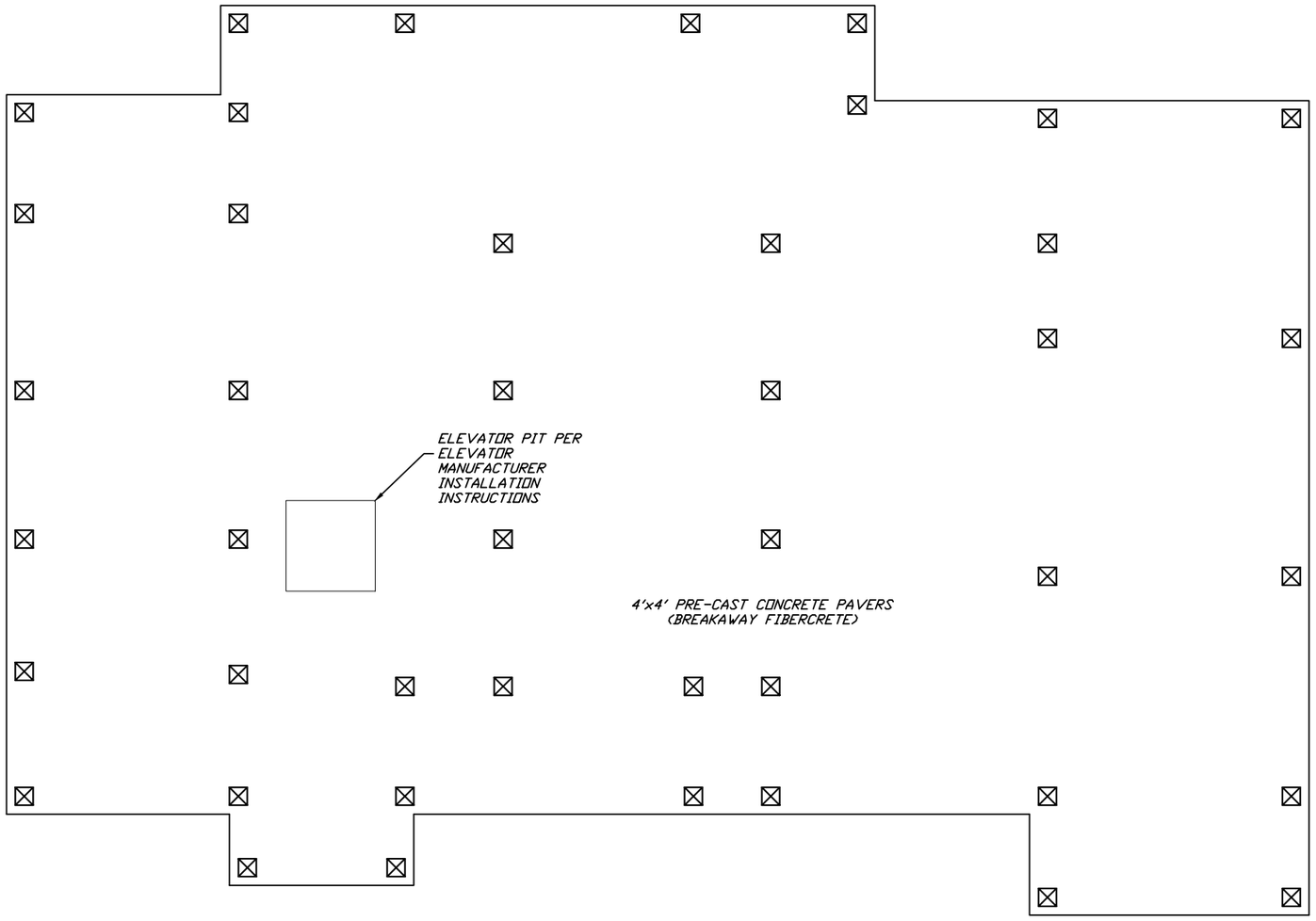

CONCRETE FOUNDATION LAYOUT

WES BUCHHORN, PE
TIM BUCHHORN, PE

THIS DRAWING SET SHALL NOT BE USED FOR PERMITTING OR CONSTRUCTION UNLESS AN ENGINEERING SEAL FROM SOUTHEAST TEXAS ENGINEERING AND INSPECTIONS IS AFFIXED

FIRM REGISTRATION #13882

NO.	ISSUE / REVISION	DATE
	ORIGINAL RELEASE	8-14-19

SOUTHEAST TEXAS
ENGINEERING AND
INSPECTIONS, LLC
(OFFICE) 409-741-8741
(WES) 409-795-1415
(TIM) 409-795-1181
8017 HARBORSIDE DRIVE,
GALVESTON, TX 77554
SOUTHEASTTEXASENGINEERING.COM

ENGINEER STAMP AND SIGNATURE

STATE OF TEXAS
WESLEY ALLAN BUCHHORN
108508
LICENSED
PROFESSIONAL ENGINEER

8-14-19

NEW RESIDENCE
OWNER: BLAKE MOAK
18227 EAST DAVACA
INDIAN BEACH
GALVESTON, TEXAS

TITLE
CONCRETE
FOUNDATION LAYOUT

DATE
AUG. 14, 2019

SCALE
$\frac{1}{8}$"=1'-0"

SHEET
S4-1 OF 20

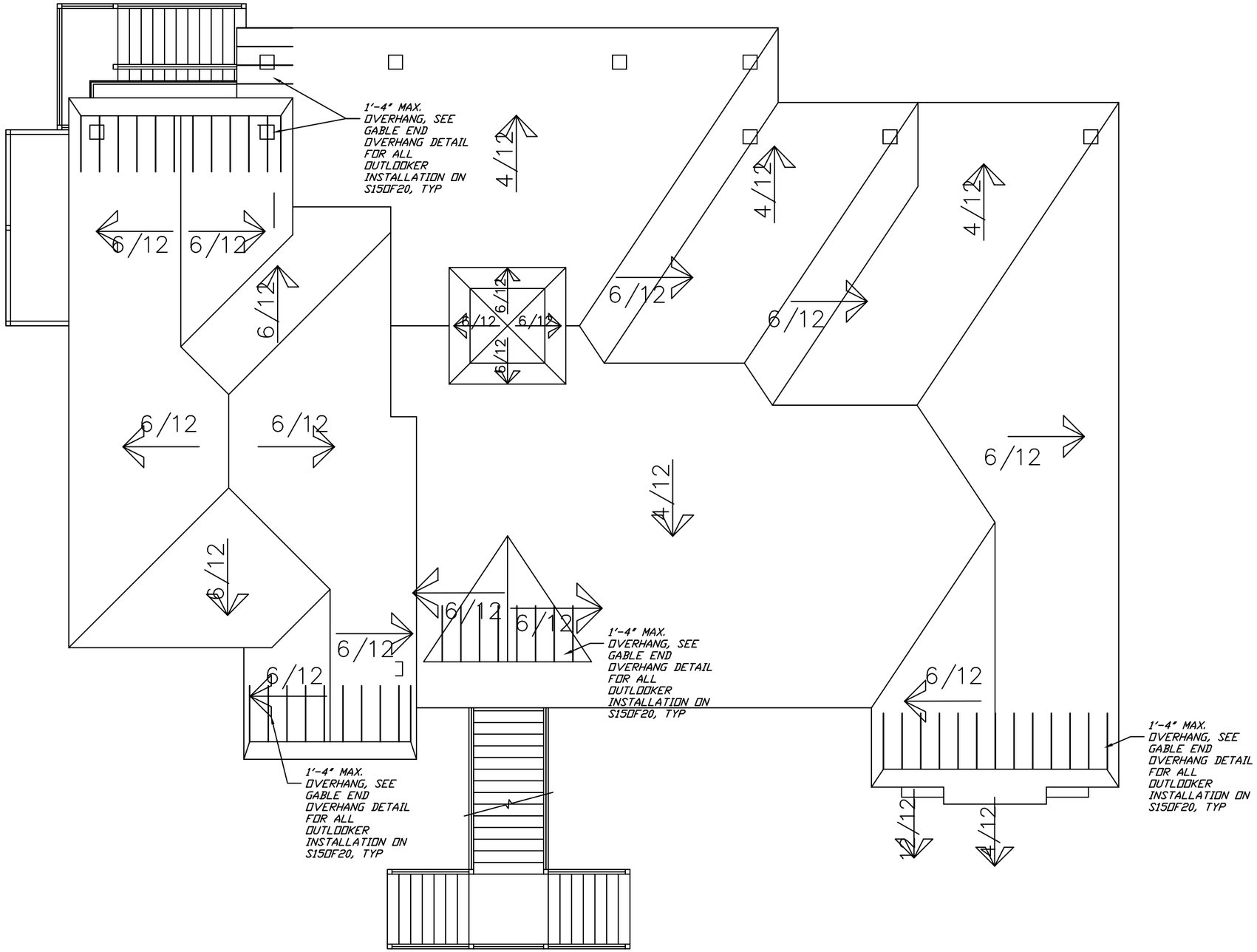

ROOF PLAN

ALL RAFTERS TO BE 2X6 @ 16" O.C. (UND), SYP#2 MIN., 8'-6" MAX. UNSUPPORTED SPAN, SEE PURLIN BRACE DETAIL ON S16OF20
ALL HIP/RIDGES TO BE 2X8 (UND), BRACED 4'-0" O.C., SEE PURLIN BRACE DETAIL ON S16OF20
LSTA24 HIP/RIDGE STRAPS @ 16" O.C., SEE DETAIL ON S15OF20
2X6 COLLAR TIES @ 16" O.C., SEE DETAIL ON S15OF20
NAIL ALL CEILING JOIST TO RAFTER W/ (5) 10d COMMON GALV. NAILS, TYP
H2.5A CLIP EACH RAFTER TO TOP PLATE, SEE DETAIL ON S12OF20
5/8" PLY ROOF DECK, 4X6 NAILED W/ 10d COMMON GALV. NAILS UNDER 30LB. FELT
COMPOSITION SHINGLES INSTALLED PER MANUFACTURER'S INSTALLATION INSTRUCTIONS

WES BUCHHORN, PE
TIM BUCHHORN, PE

THIS DRAWING SET SHALL NOT BE USED FOR PERMITTING OR CONSTRUCTION UNLESS AN ENGINEERING SEAL FROM SOUTHEAST TEXAS ENGINEERING AND INSPECTIONS IS AFFIXED

FIRM REGISTRATION #13882

NO.	ISSUE / REVISION	DATE
	ORIGINAL RELEASE	8-14-19

SOUTHEAST TEXAS ENGINEERING AND INSPECTIONS, LLC
(OFFICE) 409-741-8741
(WES) 409-795-1415
(TIM) 409-795-1181
8017 HARBORSIDE DRIVE,
GALVESTON, TX 77554
SOUTHEASTTEXASENGINEERING.COM

ENGINEER STAMP AND SIGNATURE

STATE OF TEXAS
WESLEY ALLAN BUCHHORN
108508
LICENSED
PROFESSIONAL ENGINEER

8-14-19

NEW RESIDENCE
OWNER: BLAKE MOAK
18227 EAST DAVACA
INDIAN BEACH
GALVESTON, TEXAS

TITLE: ROOF LAYOUT	
DATE: AUG. 14, 2019	
SCALE: 1/8"=1'-0"	SHEET: S8 OF 20

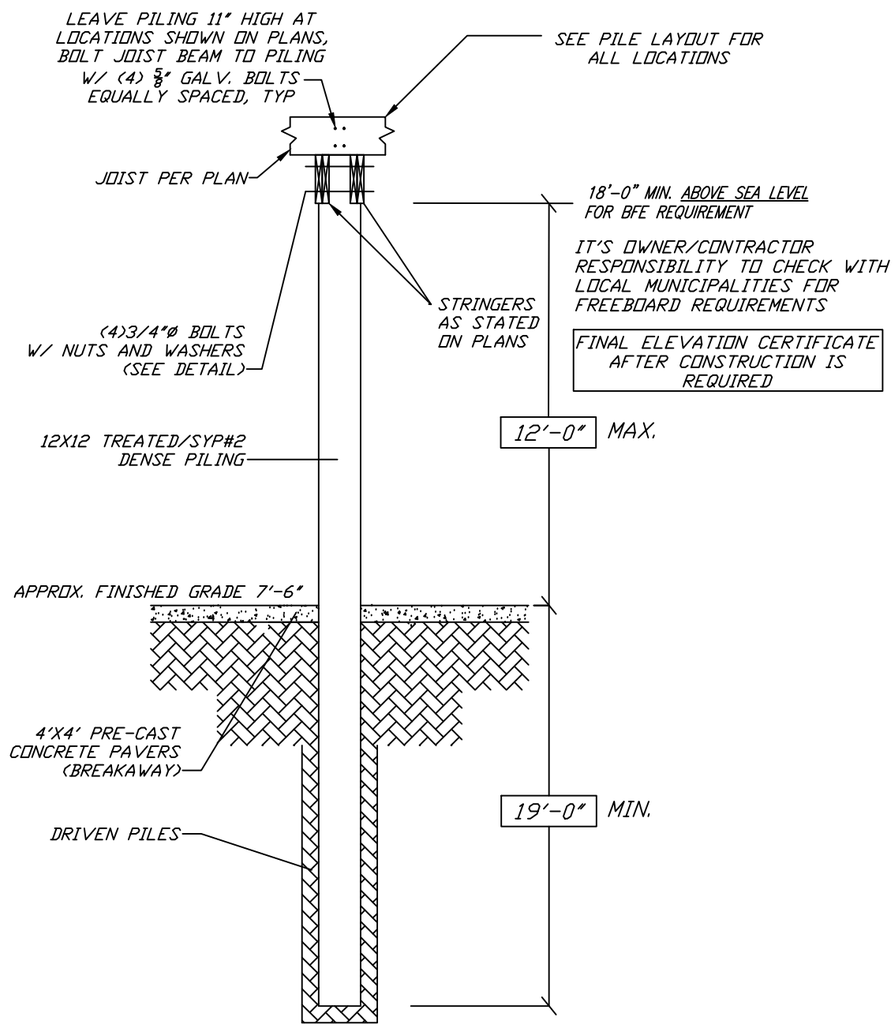

TYPICAL PIER DETAILS

SCALE NTS

WES BUCHHORN, PE
TIM BUCHHORN, PE

THIS DRAWING SET SHALL NOT BE USED FOR PERMITTING OR CONSTRUCTION UNLESS AN ENGINEERING SEAL FROM SOUTHEAST TEXAS ENGINEERING AND INSPECTIONS IS AFFIXED

FIRM REGISTRATION #13882

NO.	ISSUE / REVISION	DATE
	ORIGINAL RELEASE	8-14-19

SOUTHEAST TEXAS ENGINEERING AND INSPECTIONS, LLC
(OFFICE) 409-741-8741
(WES) 409-795-1415
(TIM) 409-795-1181
8017 HARBORSIDE DRIVE,
GALVESTON, TX 77554
SOUTHEASTTEXASENGINEERING.COM

ENGINEER STAMP AND SIGNATURE

STATE OF TEXAS
WESLEY ALLAN BUCHHORN
108508
LICENSED
PROFESSIONAL ENGINEER

8-14-19

NEW RESIDENCE
OWNER: BLAKE MOAK
18227 EAST DAVACA
INDIAN BEACH
GALVESTON, TEXAS

TITLE
PILE/CONCRETE FOUNDATION DETAILS

DATE
AUG. 14, 2019

SCALE
NTS

SHEET
S9 OF 20

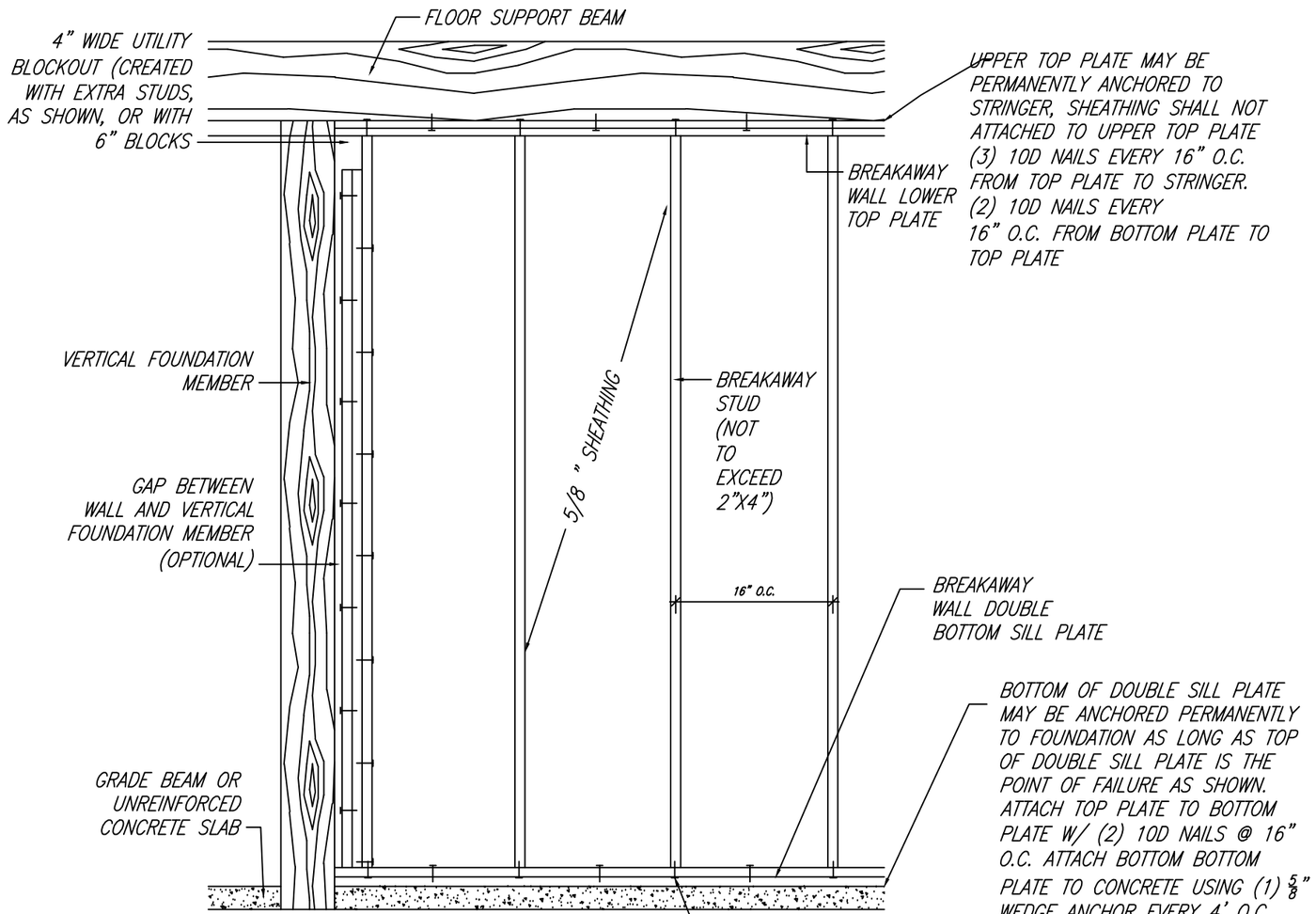

V-ZONE BREAKAWAY DETAIL

TYPICAL WOOD-FRAME BREAKAWAY WALL

NOTE: ALL LUMBER BELOW BFE MUST BE WATER-RESISTANT PER FEMA REQUIREMENTS.
(THIS INCLUDES ALL LUMBER INCLUDING PLYWOOD)

WES BUCHHORN, PE
TIM BUCHHORN, PE

THIS DRAWING SET SHALL NOT BE USED FOR PERMITTING OR CONSTRUCTION UNLESS AN ENGINEERING SEAL FROM SOUTHEAST TEXAS ENGINEERING AND INSPECTIONS IS AFFIXED

FIRM REGISTRATION #13882

NO.	ISSUE / REVISION	DATE
	ORIGINAL RELEASE	8-14-19

SOUTHEAST TEXAS ENGINEERING AND INSPECTIONS, LLC
(OFFICE) 409-741-8741
(WES) 409-795-1415
(TIM) 409-795-1181
8017 HARBORSIDE DRIVE,
GALVESTON, TX 77554
SOUTHEASTTEXASENGINEERING.COM

ENGINEER STAMP AND SIGNATURE

STATE OF TEXAS
WESLEY ALLAN BUCHHORN
108508
LICENSED
PROFESSIONAL ENGINEER

8-14-19

NEW RESIDENCE
OWNER: BLAKE MOAK
18227 EAST DAVACA
INDIAN BEACH
GALVESTON, TEXAS

TITLE: BREAKAWAY WALL DETAILS

DATE: AUG. 14, 2019

SCALE: NTS

SHEET: S18 OF 20

ALL STAIR/HANDRAIL/GUARDRAIL DETAILS ARE FOR DESIGN PURPOSE AND SHALL BE INSPECTED BY LOCAL CITY/MUNICIPALITY FOR COMPLIANCE, SETE TAKES NO RESPONSIBILITY FOR FINAL COMPLIANCE

GUARDRAIL/HANDRAIL DESIGNED ON SITE TO FIT CRITERIA BELOW:
PERIMETER DIMENSION OF ATLEAST 4" AND NOT GREATER THAN 6¼" WITH MAX. CROSS-SECTION OF 2¼"

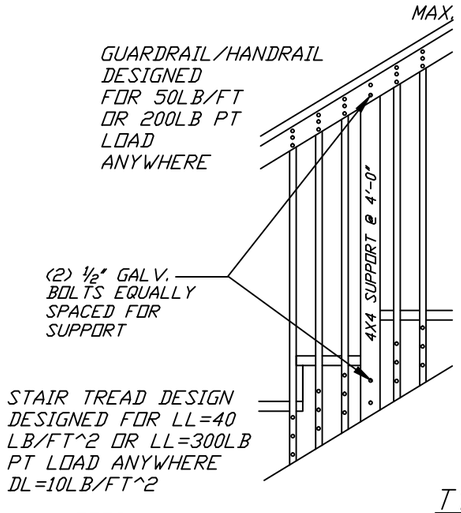

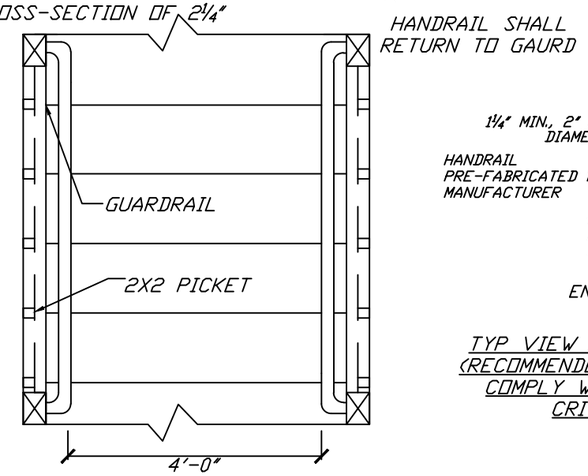

TYP SECTION HANDRAIL TOP VIEW
HANDRAIL NOT SHOWN FOR CLARITY

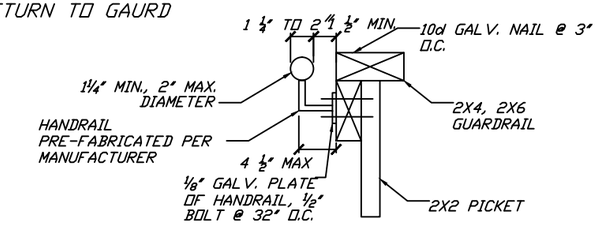

TYPE 1 CIRCULAR HANDRAIL
END VIEW OF TOP GUARD OF HANDRAIL

TYP VIEW OF HANDRAIL (RECOMMENDED) BUT MUST COMPLY WITH ABOVE CRITERIA

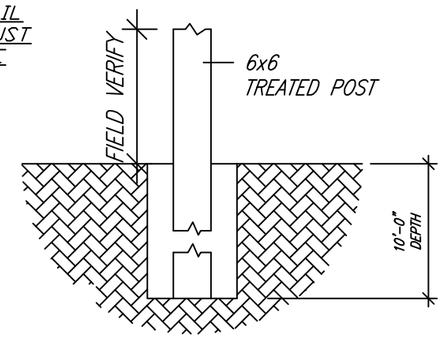

FOOTING DETAIL FOR 6X6 LANDING POSTS A/C PLATFORMS

NOTES:

STAIR RISER HEIGHTS SHALL BE 4" MIN., 7¾" MAX.
STAIR TREAD DEPTHS SHALL BE 10" MIN.
HANDRAIL HEIGHTS FROM TOP OF STAIR TREAD TO TOP OF HANDRAIL SHALL BE 34" MIN., 38" MAX.
GUARDRAIL HEIGHTS FROM TOP OF RAIL TO FLOOR TO BE A 3'-6" MIN.
2X2 PICKET SPACING 4" MAX.
(3) 2X12 RUNNERS EQUALLY SPACED UNDER STAIR
(3) 10d NAILS EQUALLY SPACED CONNECTING PICKET TO OUTSIDE STRINGER.
(3) 10d NAILS EQUALLY SPACED CONNECTING PICKET TO GUARDRAIL.
ALL LANDINGS SHALL BE A MINIMUM OF 36"X36"
LANDINGS FROM STAIRS TO GROUND LEVEL TO BE 36"X36" CONCRETE LANDINGS AS APPLICABLE.

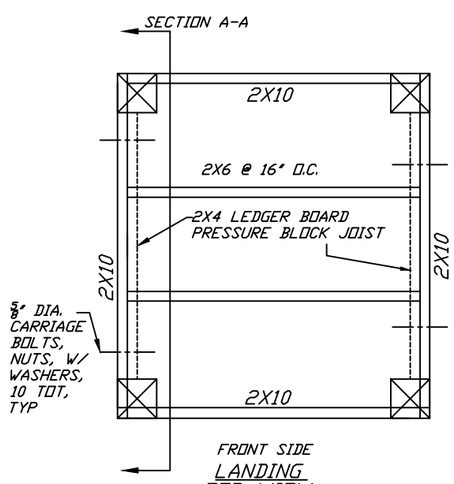

LANDING TOP VIEW

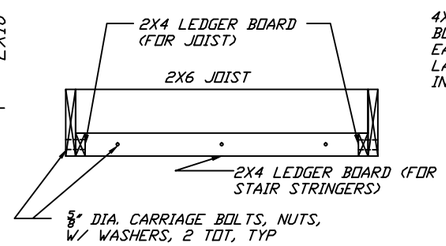

SECTION A-A

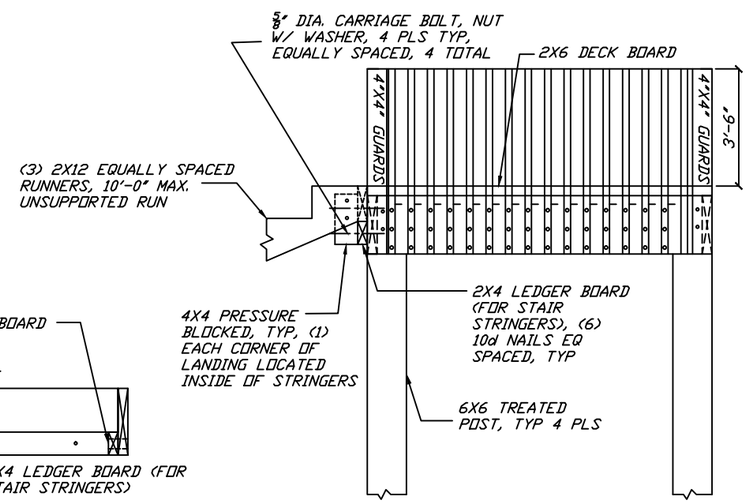

ELEVATION VIEW TYP
GUARDS FOR DECKS/LANDINGS TO BE SPACED 4' O.C. AS SHOWN

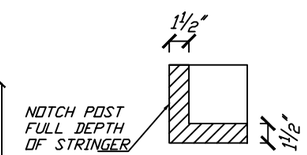

TYP POST NOTCH DETAIL FOR LANDING

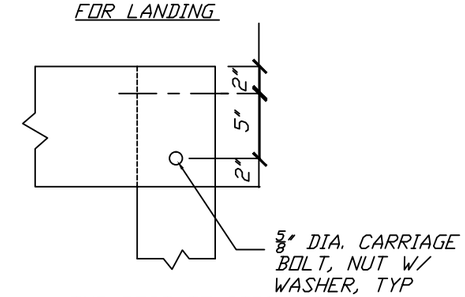

TYP POST-TO-STRINGER BOLT DETAIL (8 PLS)

WES BUCHHORN, PE
TIM BUCHHORN, PE

THIS DRAWING SET SHALL NOT BE USED FOR PERMITTING OR CONSTRUCTION UNLESS AN ENGINEERING SEAL FROM SOUTHEAST TEXAS ENGINEERING AND INSPECTIONS IS AFFIXED

FIRM REGISTRATION #13882

NO.	ISSUE / REVISION	DATE
	ORIGINAL RELEASE	8-14-19

SOUTHEAST TEXAS ENGINEERING AND INSPECTIONS, LLC
(OFFICE) 409-741-8741
(WES) 409-795-1415
(TIM) 409-795-1181
8017 HARBORSIDE DRIVE,
GALVESTON, TX 77554
SOUTHEASTTEXASENGINEERING.COM

ENGINEER STAMP AND SIGNATURE

STATE OF TEXAS
WESLEY ALLAN BUCHHORN
108508
LICENSED
PROFESSIONAL ENGINEER

8-14-19

NEW RESIDENCE
OWNER: BLAKE MOAK
18227 EAST DAVACA
INDIAN BEACH
GALVESTON, TEXAS

TITLE: STAIR/HANDRAIL DETAILS

DATE: AUG. 14, 2019

SCALE: NTS

SHEET: S19 OF 20

SOUTHEAST TEXAS ENGINEERING & INSPECTIONS, LLC
Physical Address: 8017 Harborside Drive, Suite B; Galveston, TX 77554
Mailing Address: P.O. Box 390; Galveston, TX 77553
Phone #: 409-741-8741, Office & 409-795-1415, Cell
Fax #: 409-741-8751
Firm Registration #: 13882
Website: http://www.southeasttexasengineering.com

August 14, 2019

City of Galveston
Building Department
Fax #: 409-797-3661

Subject:	18227 East Davaca, Galveston
Scope of Work:	New Residence
Owner/Builder:	Blake Moak
Address:	
City:	
Phone:	

I am a professional engineer licensed to practice in the State of Texas. The engineer of record for this project will be Southeast Texas Engineering & Inspections, LLC.

The structure located at the address above will be designed and constructed according to the 2012 International Residential Code (IRC) and designed for 150 mph Exposure C (3 second gust) (ultimate) according to ASCE 7-10.

A WPI-1 will be filed with the Texas Department of Insurance at the beginning of the project. The structure will be inspected by Southeast Texas Engineering & Inspections, LLC to ensure the structure is built according to the plans and code provisions. Once the project is completed, a WPI-2 will be submitted to the Texas Department of Insurance so that the Certificate of Compliance (WPI-8) may be issued.

Sincerely,

STATE OF TEXAS
WESLEY ALLAN BUCHHORN
108508
LICENSED
PROFESSIONAL ENGINEER

Wesley A. Buchhorn, P. E.
108508

TABLE OF CONTENTS

TITLE	SHT
INSPECTION SHEET	S1OF2
SITE PLAN SHOWING WALKOVER LOCATION ONLY	S1.1OF2
WALKOVER LAYOUT	S2OF2
GUARDRAIL DETAILS	S2.1OF2

GENERAL STRUCTURAL NOTES:

DESIGN CONDITIONS:

DEAD AND LIVE LOADS PER IBC 2012, ASCE7-10 PER CITY OF GALVESTON REQUIREMENTS
WIND CONDITION 150 MPH, 3-SEC GUST
EXPOSURE D, IMPORTANCE .77 (LOWEST)
DECK LIVE LOAD = 40 PSF, DL=10 PSF
GUARDRAIL - 50 LB./FT., 200 LB. PT LOAD
STAIR TREAD DESIGN - LL=40 PSF OR
LL=300 LB POINT LOAD ANYWHERE. DL=10 PSF

FRAMING LUMBER:

#2 SYP OR BETTER, UNO
ALL EXPOSED LUMBER SHALL BE TREATED
ALL LUMBER IN DIRECT CONTACT W/ SALTWATER TO BE TREATED (2.5CCA)
ALL LUMBER IN DIRECT CONTACT W/ GROUND TO BE TREATED (.6CCA)
ALL OTHER EXPOSED LUMBER SHALL BE TREATED (.4CCA)

COMPONENTS AND CLADDING PRESSURES:

ALL EXPOSED FASTENERS AND WINDOWS/DOORS/SIDING/ROOF FASTENERS SHALL BE HDG OR SS

SPECIAL NOTES:

1. CARE MUST BE TAKEN TO ENSURE NAILS ARE NOT OVER DRIVEN IN SHEATHING, DECKING, SIDING AND SIMILAR APPLICATIONS.
2. ALL EXPOSED LUMBER SHALL BE TREATED.
3. THE ENGINEER-OF-RECORD MUST BE CONTACTED WHEN CONFLICTS IN STRUCTURAL REQUIREMENTS ARE DISCOVERED. DO NOT PROCEED UNTIL RESOLUTION OF CONFLICTS ARE COMPLETE.
4. ALL WOOD BELOW BFE MUST BE TREATED.
5. ALL DIMENSIONS ARE APPROXIMATE AND SHALL BE FIELD VERIFIED BY CONTRACTOR/OWNER.
6. ATTACH DECK BOARDS TO JOISTS AT EACH JOIST INTERSECTION USING (2) #10X3" SS SCREWS.

NOTE: CONTACT ENGINEER IMMEDIATELY FOR CLARIFICATIONS WHEN CONFLICTING STRUCTURAL REQUIREMENTS ARE DISCOVERED

DUNE WALKOVER REQUIREMENTS:

1. DUNE WALKOVERS SHALL NOT EXCEED SIX FEET IN WIDTH, THE DECK OR FLOOR OF WHICH SHALL BE CONSTRUCTED AT A HEIGHT ABOVE THE HIGHEST DUNE OF NOT LESS THAN THE WIDTH OF THE WALKOVER, AND MAINTAIN THIS HEIGHT OVER THE ENTIRE DUNE AREA. WALKOVERS IN EXCESS OF FOUR FEET IN WIDTH SHALL ON BY CONSIDERED FOR INDIVIDUAL LOTS THAT REQUIRE ACCESS FOR DISABLED PERSONS, SHARED WALKOVERS AMONG (3) OR MORE INDIVIDUAL LOTS OR FOR HIGH TRAFFIC AREAS SUCH AS PUBLIC ACCESS POINTS OR MULTI-FAMILY PROPERTIES.
2. POSTS SHALL BE SPACED NO CLOSER THAN 6'-0" O.C. AND IN SUCH A MANNER THAT NEW POSTS ARE NOT NEEDED IF WALKWAY NEEDS ELEVATING.
3. ANY VEGETATION OR CONTOURS DISTURBED DURING CONSTRUCTION SHALL BE RESTORED AS PROVIDED HEREIN.
4. ONLY ONE DUE WALKOVER SHALL BE PERMITTED PER EACH RESIDENTIAL LOT.
5. DUNE WALKOVERS SHALL BE CONSTRUCTED TO MAINTAIN A ½" SPACING BETWEEN THE DECK BOARDS TO ALOW RAIN AND SAND TO PASS THROUGH THE DECKING.
6. THE WALKOVER MUST START AT THE NORTHERN BOUNDARY OF THE CRITICAL DUNE AREA AND SHALL END ON THE BEACH BEYOND ANY COPPICE MOUNDS, NO FURTHER THAN 10 FT SEAWARD OF THE VEGETATION LINE.
7. ALL WALKOVERS BUILT IN PUBLIC AREAS SHALL BE CONSTRUCTED WITH (2) HANDRAILS.
8. ALL WALKOVERS SHALL BE CONSTRUCTED ACCORDING TO THE CURRENT Ibc CODE REQUIREMENTS.
9. IT SHALL BE THE DUTY OF THE PROPERTY OWNER TO ENSURE AND MAINTAIN THE DUNE WALKOVER IS IN GOOD CONDITION OF REPAIR AND MAINTENANCE.
10. ALL DUNE WALKOVER CONSTRUCTION, IMPROVEMENT OR REPAIR MUST BE PERMITTED THROUGH THE DEPARTMENT OF PLANNING AND COMMUNITY DEVELOPMENT, CITY OF GALVESTON.

THE ABOVE NOTES ARE REQUIRED BY THE CITY OF GALVESTON ENGINEERING DIVISION, IN ORDER TO RECEIVE A PERMIT FROM GALVESTON FOR CONSTRUCTION OF DUNE WALKOVERS.

WES BUCHHORN, P.E.
TIM BUCHHORN, P.E.

THIS DRAWING SET SHALL NOT BE USED FOR PERMITTING OR CONSTRUCTION UNLESS AN ENGINEERING SEAL FROM SOUTHEAST TEXAS ENGINEERING AND INSPECTIONS IS AFFIXED

FIRM REGISTRATION #13882

NO.	ISSUE / REVISION	DATE
	ORIGINAL RELEASE	1-23-20

SOUTHEAST TEXAS ENGINEERING AND INSPECTIONS, LLC
(OFFICE) 409-741-8741
(WES) 409-795-1415
(TIM) 409-795-1181
8017 HARBORSIDE DRIVE,
GALVESTON, TX 77554
SOUTHEASTTEXASENGINEERING.COM

ENGINEER STAMP AND SIGNATURE

STATE OF TEXAS
WESLEY ALLAN BUCHHORN
108508
LICENSED
PROFESSIONAL ENGINEER

1-23-20

WALKOVER
CHAD MORGAN

18227 EAST DEVACA
GALVESTON, TEXAS

TITLE: INSPECTION SHEET	
DATE: JAN. 23, 2020	
SCALE: NTS	SHEET: S1 OF 2

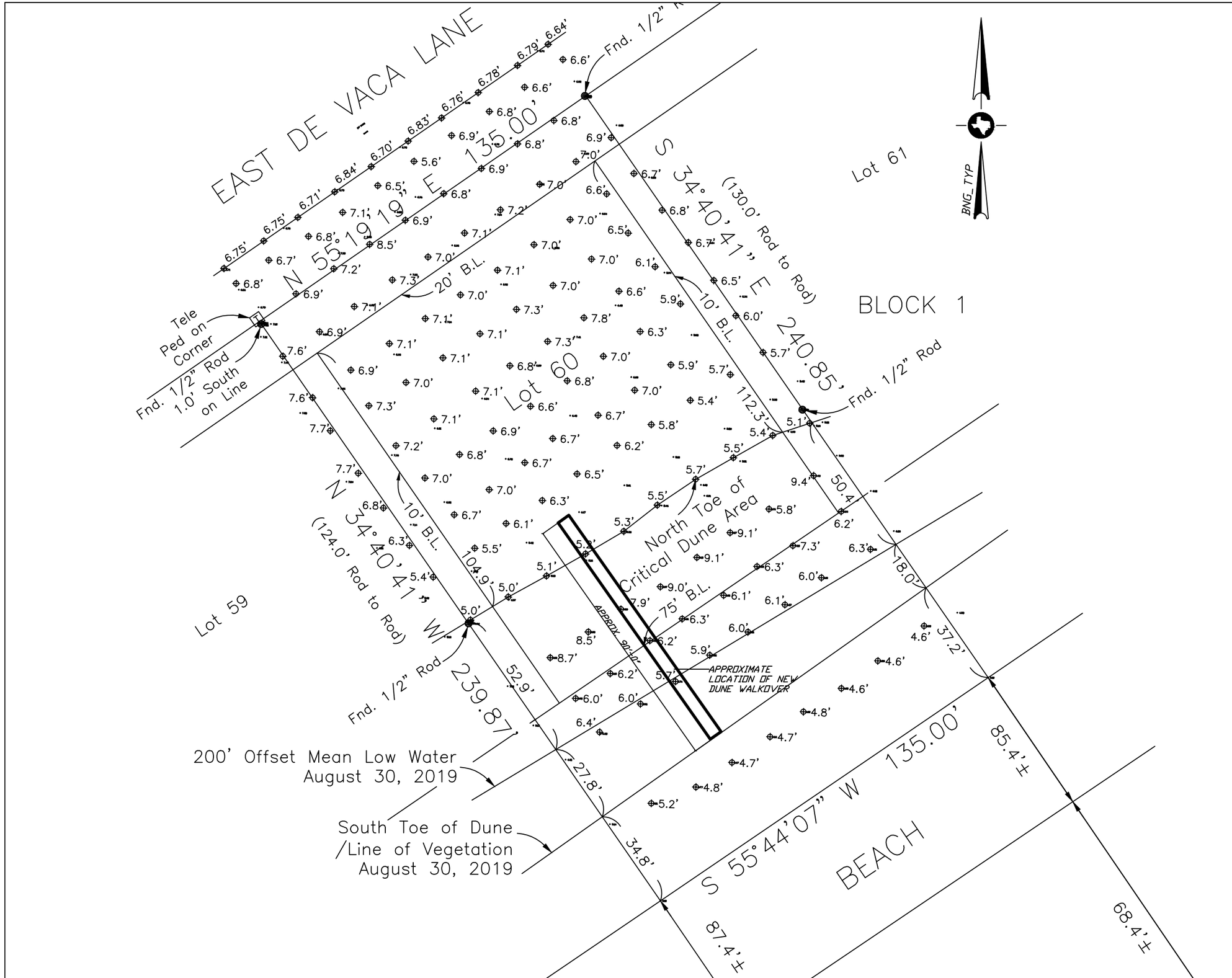

WES BUCHHORN, P.E.
TIM BUCHHORN, P.E.

THIS DRAWING SET SHALL NOT BE USED FOR PERMITTING OR CONSTRUCTION UNLESS AN ENGINEERING SEAL FROM SOUTHEAST TEXAS ENGINEERING AND INSPECTIONS IS AFFIXED

FIRM REGISTRATION #13882

NO.	ISSUE / REVISION	DATE
	ORIGINAL RELEASE	1-23-20

SOUTHEAST TEXAS ENGINEERING AND INSPECTIONS, LLC
(OFFICE) 409-741-8741
(WES) 409-795-1415
(TIM) 409-795-1181
8017 HARBORSIDE DRIVE,
GALVESTON, TX 77554
SOUTHEASTTEXASENGINEERING.COM

ENGINEER STAMP AND SIGNATURE

STATE OF TEXAS
WESLEY ALLAN BUCHHORN
108508
LICENSED
PROFESSIONAL ENGINEER

1-23-20

WALKOVER
CHAD MORGAN

18227 EAST DEVACA
GALVESTON, TEXAS

TITLE
SITE PLAN SHOWING APPROX. LOCATION OF NEW DUNE WALKOVER

DATE
JAN. 23, 2020

SCALE
NTS

SHEET
S1.1 OF2

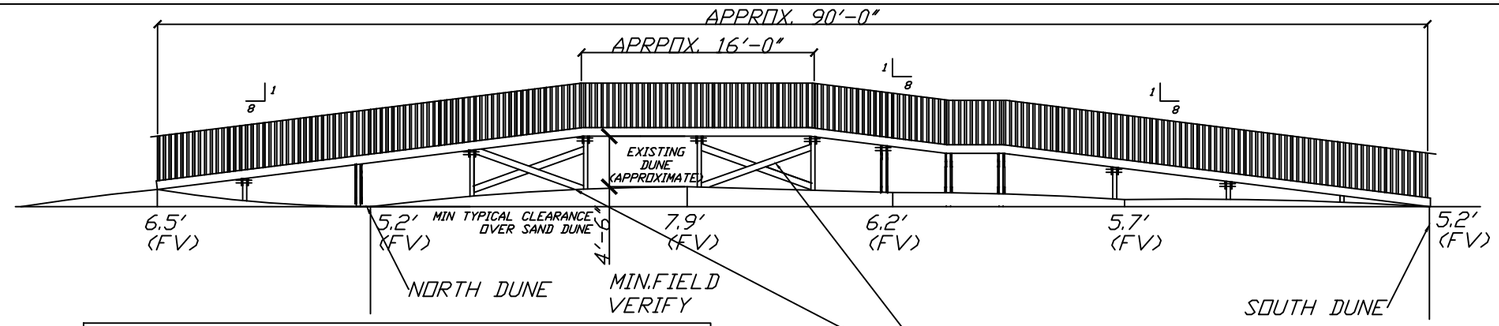

IT IS THE RESPONSIBILITY OF THE CONTRACTOR TO FIELD VERIFY THE EXACT ELEVATIONS OF THE DUNE LOCATIONS FROM THE STARTING POINT TO THE ROUGH VEGETATION LINE TO ENSURE THE WALKOVER HAS THE PROPER CLEARANCE.

2X6 CROSS BRACE, ADD FULL LENGTH SPLICE BEHIND CROSS BRACE, BOLT TO ALL COLUMNS AND INTERSECTIONS WITH 5/8" GALV. BOLT, TYP, WASHER AND NUT INCLUDED, CROSS BRACE IN BOTH DIRECTIONS (BOLTS TO BE LOCATED MIN. 6" FROM EACH OTHER)

LENGTHS WILL VARY. SETE DOES NOT TAKE RESPONSIBILITY FOR INACCURATE LENGTHS, RISE OR RUNS OF NEW DUNE WALKOVER. ALL MUST BE FIELD VERIFIED.

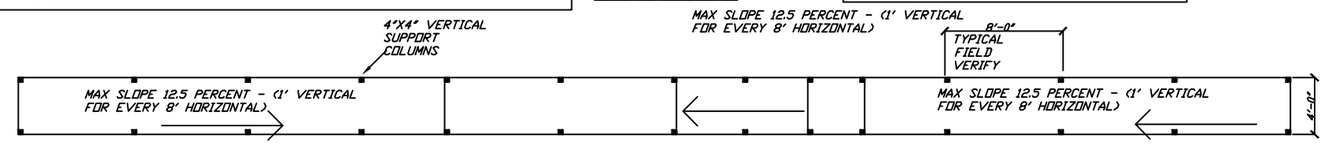

TYPICAL PLAN VIEW
(APPROXIMATE)
(WALKOVER)

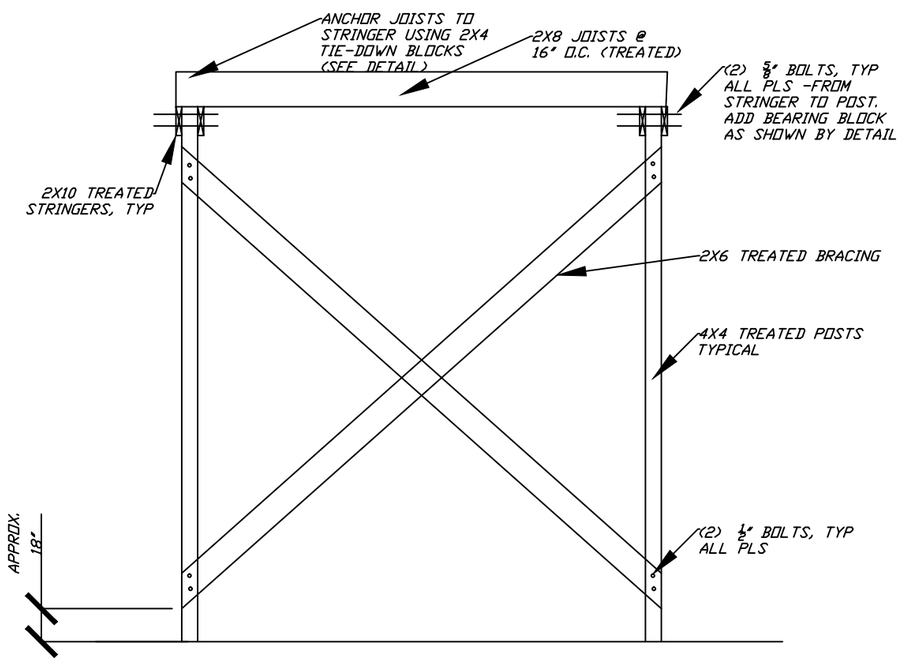

TYPICAL ANGLE BRACING DETAIL

1. BRACING TO BE DONE PERPENDICULAR TO STRINGERS WHERE SHOWN ON DRAWINGS.
2. BRACING TO BE DONE PARALLEL TO STRINGERS AT EVERY POST LOCATION PER THE DRAWINGS (BOTH DIRECTIONS)
3. ALL BOLTS TO BE HDG OR SS.

PORCH POST NOTCH DETAIL FOR DROP BEAM

ALL NOTCHES TO BE FULL DEPTH OF BEAM

(2) 5/8" GALV. BOLTS EQUALLY SPACED PER POST, DO NOT COUNTERSINK

CORNER POSTS TO HAVE (1) 5/8" GALV. BOLTS EQUALLY SPACED EACH DIRECTION

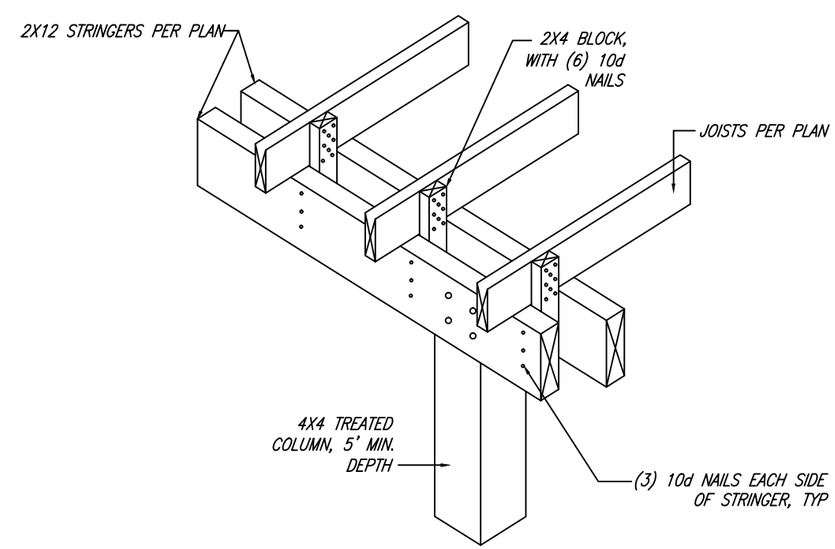

STRINGER TO JOIST CONNECTION DETAIL
NTS

WES BUCHHORN, P.E.
TIM BUCHHORN, P.E.

THIS DRAWING SET SHALL NOT BE USED FOR PERMITTING OR CONSTRUCTION UNLESS AN ENGINEERING SEAL FROM SOUTHEAST TEXAS ENGINEERING AND INSPECTIONS IS AFFIXED

FIRM REGISTRATION #13882

NO.	ISSUE / REVISION	DATE
	ORIGINAL RELEASE	1-23-20

SOUTHEAST TEXAS ENGINEERING AND INSPECTIONS, LLC
(OFFICE) 409-741-8741
(WES) 409-795-1415
(TIM) 409-795-1181
8017 HARBORSIDE DRIVE,
GALVESTON, TX 77554
SOUTHEASTTEXASENGINEERING.COM

ENGINEER STAMP AND SIGNATURE

STATE OF TEXAS
WESLEY ALLAN BUCHHORN
108508
LICENSED
PROFESSIONAL ENGINEER

1-23-20

WALKOVER
CHAD MORGAN

18227 EAST DEVACA
GALVESTON, TEXAS

TITLE: WALKOVER	
DATE: JAN. 23, 2020	
SCALE: NTS	SHEET: S2 OF 2

TYPICAL RAMP NOTES:

1. ALL RAMP PITCHES TO BE NO GREATER THAN 1:8.
2. MAX RAMP RUN TO BE NO GREATER THAN 30'-0".
3. THE LANDING SHALL BE AT LEAST AS WIDE AS THE RAMP RUN LEADING TO IT.

HANDRAILS:

1. IF A RAMP RUN HAS A RISE GREATER THAN 6IN OR A HORIZONTAL PROJECTION GREATER THAN 72IN, THEN IT SHALL HAVE HANDRAILS ON BOTH SIDES. HANDRAILS ARE NOT REQUIRED ON CURB RAMPS OR ADJACENT TO SEATING IN ASSEMBLY AREAS.
2. HANDRAILS SHALL BE PROVIDED ALONG BOTH SIDES OF RAMP SEGMENTS. THE INSIDE HANDRAIL ON SWITCHBACK OR DOGLEG RAMPS SHALL ALWAYS BE CONTINUOUS.
3. THE CLEAR SPACE BETWEEN THE HANDRAIL AND THE WALL SHALL BE 1 ½".
4. GRIPPING SURFACES SHALL BE CONTINUOUS.
5. TOP OF HANDRAIL GRIPPING SURFACES SHALL BE MOUNTED BETWEEN 34"-38" ABOVE RAMP SURFACES.
6. END OF HANDRAILS SHALL BE EITHER ROUNDED OR RETURNED SMOOTHLY TO FLOOR, WALL, OR POST.
7. HANDRAIL SHALL NOT ROTATE WITHIN THERE FITTINGS.
8. ALL LUMBER SHALL BE TREATED.
9. ALL FASTENERS SHALL BE A MIN. OF HDG OR SS.
10. USE WASHERS ON ALL BOLTED CONNECTIONS.
11. ALL RAMP/LANDING SUPPORTS TO BE SYP #2 4"X6" TREATED POSTS.

2X6 CROSS BRACING WILL BE REQUIRED ON ALL RAMPS/ LANDINGS AT EVERY POST LOCATION.

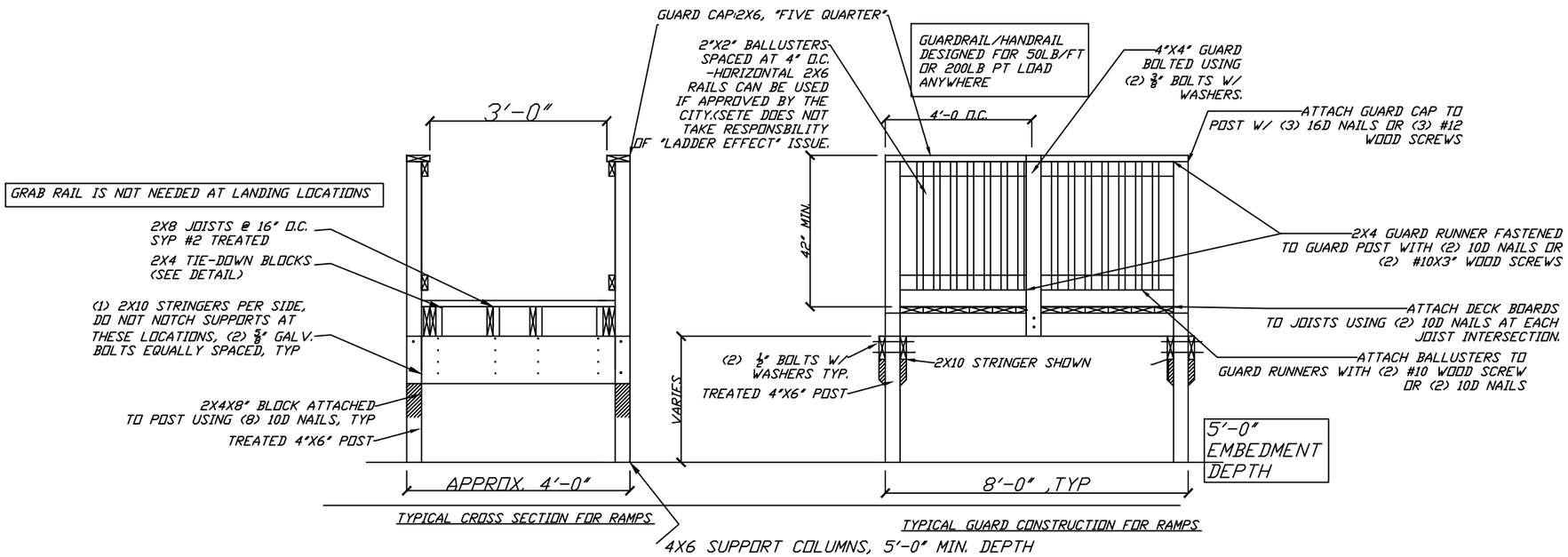

TYPICAL RAMP DETAILS

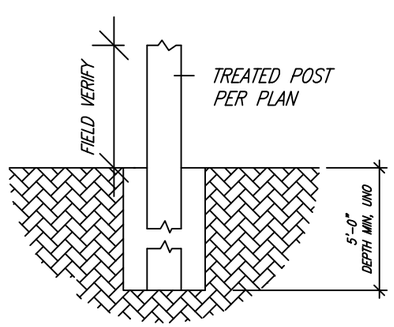

FOOTING DETAIL FOR POSTS

WES BUCHHORN, P.E.
TIM BUCHHORN, P.E.

THIS DRAWING SET SHALL NOT BE USED FOR PERMITTING OR CONSTRUCTION UNLESS AN ENGINEERING SEAL FROM SOUTHEAST TEXAS ENGINEERING AND INSPECTIONS IS AFFIXED

FIRM REGISTRATION #13882

NO.	ISSUE / REVISION	DATE
	ORIGINAL RELEASE	1-23-20

SOUTHEAST TEXAS ENGINEERING AND INSPECTIONS, LLC
(OFFICE) 409-741-8741
(WES) 409-795-1415
(TIM) 409-795-1181
8017 HARBORSIDE DRIVE,
GALVESTON, TX 77554
SOUTHEASTTEXASENGINEERING.COM

ENGINEER STAMP AND SIGNATURE

STATE OF TEXAS
WESLEY ALLAN BUCHHORN
108508
LICENSED
PROFESSIONAL ENGINEER

1-23-20

WALKOVER
CHAD MORGAN

18227 EAST DEVACA
GALVESTON, TEXAS

TITLE: GUARDRAIL DETAILS

DATE: JAN. 23, 2020

SCALE: NTS

SHEET: S2.1 OF 2

SOUTHEAST TEXAS ENGINEERING & INSPECTIONS, LLC
Physical Address: 8017 Harborside Drive, Suite B; Galveston, TX 77554
Mailing Address: P.O. Box 390; Galveston, TX 77553
Phone #: 409-741-8741, Office & 409-795-1415, Cell
Fax #: 409-741-8751
Firm Registration #: 13882
Website: http://www.southeasttexasengineering.com

January 23, 2020

City of Galveston
Building Department
Fax #: 409-797-3661

Subject:	18227 East Devaca, Galveston
Scope:	Dune Walkover
Owner/Builder:	Chad Morgan
Address:	
City:	
Phone:	

I am a professional engineer licensed to practice in the State of Texas. The engineer of record for this project will be Southeast Texas Engineering & Inspections, LLC.

The structure located at the address above will be designed and constructed according to the 2012 International Business Code (IBC) and designed for 150 mph Exposure D (3 second gust) according to ASCE 7-10 per City of Galveston requirements.

Sincerely,

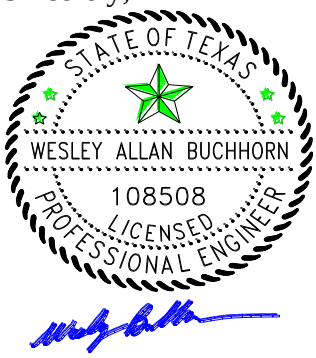

Wesley A. Buchhorn, P. E.
#108508

Beach Looking East

ach Looking North Over Du

North End of Lot

Overview of Dune

East to West over Dune

East to West over Dune3

East to West over Dune2

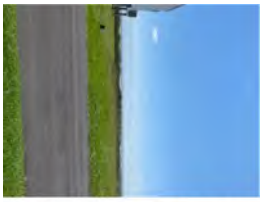
NorthEast - Looking South

outh Center - Looking Eas

uthWest Pin - Looking Nor

hEast Lot Line - Looking S

Beach Looking West

Neighbors Dune Walkover

ast Lot Line - Looking Wes

st - Looking SouthWest ov

hbors Walkover 2 House D

bors Walkover 2 House D

t LotLine - Looking East Al

outh Center - Looking Nort

thEast Lot Line - Looking W

ast Lot Line - Looking Sou

NorthWest - Looking East

nWest Lot Line - Looking S

orthWest Pin - Looking Ea

SouthCenter - Looking Eas

East - Looking West Over

thCenter - Looking North W

South LotLine- Along Dune

thCenter - Looking NorthE

thCenter - Looking NorthW

outhCenter - Looking Sout

outhEast Pin - Looking Nor

SouthEast Lot line

hEast Pin - Looking North

SouthEast Overview of Lot

ıEast Pin - Looking NorthW

ɔuthEast Pin - Looking We

hWest Pin - Looking North

TEXAS GENERAL LAND OFFICE
GEORGE P. BUSH, COMMISSIONER

May 1, 2020

Via Electronic Mail

Virginia Greb
Coastal Resources Assistant Manager
Development Services Department
City of Galveston
823 Rosenberg, Room 401
Galveston, Texas 77550-2103

Beachfront Construction Certificate and Dune Protection Permit in the City of Galveston

Site Address:	18227 E De Vaca Lane, Galveston
Legal Description:	ABST 121 Hall & Jones sur Lot 60 (60-1) Indian Beach Sec 4
Lot Applicant:	Blake & Jillian Moak
Case Number:	20P-15
GLO ID No.:	BDCOG-20-0107

Dear Ms. Greb:

The General Land Office (GLO) has reviewed the application materials for a beachfront construction certificate and dune protection permit for the above-referenced location. The applicant proposes to construct a single-family residence with two crushed concrete driveways. The applicant also proposes to construct a 3-foot-wide private dune walkover. The proposed single-family residence is located within 200 feet of the line of vegetation, within the Enhanced Construction Zone, and adjacent to the Dune Conservation Area. According to the Bureau of Economic Geology, the area is eroding at a rate of three to four feet per year.

Based on the information provided to our office for review, we have the following comments:

- The City must minimize the proliferation of excessive private access by permitting only the minimum necessary number of private beach access points to the beach from any subdivision.[1] The City may consider requesting that the applicant construct the dune walkover in a location where shared access may be provided to a neighboring property owner in the future.

- The applicant may not damage any dune vegetation or clear or remove any vegetation on either side of the proposed dune walkover for the purpose of facilitating construction.[2]

- Dune walkovers may not impede or restrict public access to the beach at normal high tide.[3]

[1] 31 Tex. Admin. Code § 15.4(f)(2)(B)(iii).
[2] 31 Tex. Admin. Code § 15.4(f)(1).
[3] Tex. Admin. Code § 15.7(g)(2).

The applicant should terminate the dune walkover no farther seaward than the line of vegetation as depicted on the survey dated April 9, 2020 included in the application materials.

- The City shall require the applicant to relocate the walkover to follow any landward migration of the public beach or seaward migration of the dunes.[4]

- The dune walkover shall be constructed at a height above the highest dune of not less than the width of the dune walkover and maintain this height over the entire dune area.[5]

- With the exception of the paired posts constructed on each side of the proposed dune walkover, the support posts must be placed at intervals no closer than six feet and in such a manner that new posts are not needed if the walkway requires relocation or elevation in the future.[6]

- The proposed dune walkover must be constructed to maintain ½-inch spacing between the slats to allow rain and sand to pass through the decking.[7]

- Concrete may not be used to stabilize the base of the pilings of the dune walkover.[8]

- Paving or altering the area between the line of vegetation and 25 feet landward of the north toe of the dune is not proposed and is prohibited.[9]

- Since the proposed single-family residence is located within 200 feet of the line of vegetation, paving used under the habitable structure and for driveways connecting the habitable structure and the street is limited to the use of unreinforced fibercrete in four-foot by four-foot sections, four inches thick with sections separated by expansion joints, or pervious material.[10] A habitable structure is defined as a structure used or usable for habitation. [11] The area beneath uncovered decks or stairs may not be paved.

- The driveway must be limited to the linear width of the primary structure, along the main street, and a minimum of 15% of the front yard must be maintained as open/unimproved area.[12]

- The use of permeable materials, such as brick pavers, limestone, or gravel, is recommended for drives or parking areas.[13]

- The City must ensure the proposed construction is located as far landward as practicable.[14]

---

[4] Tex. Admin. Code § 15.7(g)(4).
[5] City of Galveston Beach Access and Dune Protection Plan § 29-90(e)(1).
[6] City of Galveston Beach Access and Dune Protection Plan § 29-90(e)(2).
[7] City of Galveston Beach Access and Dune Protection Plan § 29-90(e)(5).
[8] Tex. Admin. Code § 15.7(f)(3).
[9] City of Galveston Beach Access and Dune Protection Plan § 29-90(m)(2).
[10]City of Galveston Beach Access and Dune Protection Plan § 29-90(m)(2).
[11] City of Galveston Beach Access and Dune Protection Plan § 29-54.
[12] City of Galveston Erosion Response Plan § 5.
[13] 31 Tex. Admin. Code § 15.5(b)(3).
[14] City of Galveston Erosion Response Plan § 5 & 31 Tex. Admin. Code § 15.6(b).

- The City may only permit the applicant to construct an enclosure beneath the habitable structure if the walls are breakaway or louvered and the construction is consistent with the requirements of the National Flood Insurance Program.[15]

- The City must ensure the proposed construction is consistent with FEMA minimum requirements or with the FEMA approved local ordinance.[16]

- The City must ensure the proposed habitable structure is designed for feasible relocation.[17]

- The proposed construction activities must not result in the potential for increased flood damage to the proposed construction site or adjacent property, result in runoff or drainage patterns that aggravate erosion, cause significant changes to dune hydrology, adversely affect dune complexes or dune vegetation, or significantly increase the potential for washovers or blowouts to occur.[18]

- The proposed construction activities must minimize impacts on natural hydrology and not cause erosion of adjacent properties, critical dune areas, or the public beach.[19]

- Construction of the proposed dune walkover should conform to the GLO's guidelines provided in the Dune Protection and Improvement Manual for the Texas Gulf Coast, which is located at http://www.glo.texas.gov/coast/coastal-management/forms/files/dune-protection-manual-gpb.pdf.

Please be advised that the line of vegetation is dynamic. Structures may not encroach on the public beach. If the structure becomes located seaward of the line of vegetation because of loss of elevation, the structure may be allowed to remain in place if it does not significantly interfere with public access to the beach or present a public health and safety risk. Structures located seaward of the line of vegetation and landward of the line of mean high tide will periodically be reassessed on a case-by-case basis, and owners may be allowed to make certain repairs under the Beach/Dune rules and local government plans.

If any part of a structure comes to be located seaward of the line of mean high tide, it becomes an unauthorized structure on state-owned land. Repairs are prohibited and the state may take action to remove the structure.

If you have any questions, please contact me at (512) 463-5232 or at michelle.culver@glo.texas.gov.

Sincerely,

Michelle Culver
Beach Access & Dune Protection Program
Coastal Resources Division

[15] 31 Tex. Admin. Code § 15.6(f)(4).
[16] 31 Tex. Admin. Code § 15.6(e)(3).
[17] 31 Tex. Admin. Code § 15.6(f)(2).
[18] 31 Tex. Admin. Code § 15.4(d).
[19] 31 Tex. Admin. Code § 15.6(g).

Texas General Land Office

cc: Dustin Henry, Coastal Resources Manager

Planning Commission
Coastal Resources Division
City of Galveston
May 19, 2020

20P-017 STAFF REPORT

ADDRESS:
24131 San Luis Pass Road

LEGAL DESCRIPTION:
The property is legally described as Sur Tract 19, a subdivision located in the City and County of Galveston, Texas.

APPLICANT/REPRESENTATIVE:
Kai Adkins

PROPERTY OWNER:
Edgewood Ventures, LLC.
C/O Kai Adkins

REQUEST:
Beachfront Construction Certificate/Dune Protection Permit for construction of a single-family dwelling, driveway, and dune walkover.

APPLICABLE LAND USE REGULATIONS:
Chapter 29, Article 2, Beach Access Dune Protection and Beachfront Construction Regulation.

STAFF RECOMMENDATION:
Approval with Conditions

EXHIBITS:
A – Aerial Map
B – Topographic Survey
C – Site Plan & Drawings
D – Site Photos
E – GLO Comment Letter

STAFF:
Virginia Greb
Coastal Resources Asst. Mgr.
VGreb@GalvestonTX.gov

Note: This product is for informational purposes and may not have been prepared for or be suitable for legal, engineering, or surveying purposes. It does not represent an on-the-ground survey and represents only the approximate relative location of property boundaries. The data presented on these pages is not legally binding on the City of Galveston or any of its departments. These maps and the associated data are representations ONLY and may contain errors in the databases. Therefore, the information presented on this map is for informational purposes only and should not be construed to be legally binding.

Executive Summary:

The City of Galveston's Dune Protection and Beach Access Plan designates the Planning Commission as the authority to review and consider for approval of applications for a Beachfront Construction Certificate/Dune Protection Permit when the proposed construction activities will occur in areas within or seaward of the Dune Conservation Area or up to 50-feet landward of the Dune Protection Line. The Dune Protection Line is defined as the area within 25-feet landward of the North Toe of the Critical Dune Area or, for those beach areas where no dunes exist west of the terminus of the Seawall, within 200-feet landward of the Line of Vegetation.

The applicant is requesting approval to construct a single-family dwelling, driveway, and dune walkover within the Enhanced Construction Zone in an area approximately 45-feet from the North Toe of the Critical Dune Area and 285-feet from the Line of Vegetation. This is landward of the Dune Protection Line and within the Planning Commission review area. According to the application materials, the proposed construction activities appear to be landward of dunes and dune vegetation. Therefore, no mitigation activities are proposed.

Site and Surrounding Area:

The subject site is a 0.466-acre lot located in the Half Moon Beach Subdivision. FM-3005 is located to the North, single-family dwellings are located to the East and West, and beach area is located to the South of the subject property. According to the Bureau of Economic Geology, this area is eroding at a rate of three to four feet per year.

Analysis:

The table below summarizes the applicant survey and site plan (Attachments "B" and "C") regarding the proposed new construction and the location of proposed construction in relation to on-site conditions:

Proposed Structure's Distance from:	Distance (Feet)
…North Toe of the Dune	~45
…the Line of Vegetation	~285

In accordance with Chapter 29: Planning – Beach Access Dune Protection & Beach Front Construction, before issuing a permit, the Planning Commission must find that the proposed construction conforms with the following Beachfront Construction Certificate and Dune Protection Permit standards:

(1) The proposed activity is not a prohibited activity as defined in these standards.

The request conforms to the City of Galveston's Dune Protection and Beach Access Plan and Erosion Response Plan. The drawings, (Attachment "C"), are submitted with this request.

The applicant is proposing to build within 45-feet of the North Toe of the Critical Dune Area and within the Enhanced Construction Zone. The applicant is proposing fibercrete for the footprint of the proposed single-family dwelling and driveway material. Staff reviewed the application materials and found no prohibited activities proposed seaward of the Dune Protection Line.

The applicant is proposing to construct a dune walkover that would extend across the property located seaward of the subject property. The applicant is not the legal property owner of the seaward lot. The applicant shall provide documentation to City staff stating the legal property owner of the seaward lot has authorized construction prior to the issuance of a beachfront permit for the proposed dune walkover.

The proposed construction is landward of the Dune Protection Line and the Dune Conservation Area. Therefore, a ground floor enclosure is permitted in the area 25-feet landward of the North Toe of the Critical Dune Area. Note: the City's locally adopted flood ordinance requires ground floor enclosures to be no greater than 299 square feet as measured from the outside of the enclosure.

(2) The proposed activity will not materially weaken dunes or materially damage dune vegetation seaward of the Dune Protection Line based on substantive findings as defined in "Technical Standards" of these standards.

According to Section 29-2(k) Technical Standards, the Planning Commission shall not approve an application for construction if it is determined that it will result in a material weakening and material damage of dune vegetation. The following standards are to be used to make this determination:

a. The activity shall not result in the potential for increased flood damage to the proposed construction site or adjacent property;

b. The activity shall not result in runoff or drainage patterns that aggravate erosion on or off the site;

c. The activity shall not result in significant changes to dune hydrology;

d. The activity shall not result in adverse affects on dune complexes or dune vegetation;

e. The activity shall not significantly increase the potential for washovers or blowouts to occur; or

f. The Commission shall not issue a Beachfront Construction Certificate and Dune Protection Permit authorizing construction unless the construction and property design is designed so as to minimize impacts on natural hydrology. Such projects shall not cause erosion to adjacent properties, critical dune areas, or the public beach.

The Technical Standards also state that the Planning Commission should take into consideration all comments from the Texas General Land Office when deciding whether to grant a Beachfront Construction Certificate/Dune Protection Permit. Attachment "E" lists the comments from the Texas General Land Office for this request. Should the Planning Commission approve this request, the GLO comments are recommended as specific conditions for this request.

The proposed construction will be required to be consistent with FEMA minimum requirements, which should not increase the potential for increased flood damage to the construction site or adjacent property.

As a result of the construction, the applicant is prohibited from affecting runoff or drainage patterns that would aggravate erosion on or off site, result in significant changes to dune hydrology, or significantly increase the potential for washovers or blowouts to occur. Runoff should be directed away from the dune area. The applicant is required to direct all non-natural drainage on the lot away from the beach and dunes, and toward the drainage infrastructure in the subdivision and in the street landward of the lot. Drainage plans are to be reviewed and approved by the City Engineering Department.

The proposed construction activities are taking place landward of the Dune Conservation Area. Staff finds that the proposed construction will not materially weaken dunes or materially damage dune vegetation as defined by these Technical Standards.

(3) There are no practicable alternatives to the proposed activity that is located seaward of the Dune Protection Line and adverse effects cannot be avoided as provided in the Mitigation sequence as outlined in these Standards.

The City's Dune Protection and Beach Access Plan states that the Planning Commission shall utilize the Mitigation Sequence in determining whether to issue a permit for an activity located seaward of the Dune Protection Line, after the determination that no material weakening of dunes or material damages to dunes will occur within critical dune areas or seaward of the Dune Protection Line. The mitigation sequence is as follows:

1) **Avoid** the impact altogether by not taking a certain action or parts of an action;

2) **Minimize** impacts by limiting the degree or magnitude of the action and its implementation;

3) **Rectify** the impact by repairing, rehabilitating, or restoring the affected environment; and,

4) **Compensate** for the impact by replacing resources lost or damaged.

Proposed construction is landward of the Dune Conservation Area. No construction activities seaward of the Dune Protection Line are proposed with this request and no adverse effects to dunes or dune vegetation are expected.

(4) The applicant's mitigation plan, for an activity seaward of the Dune Protection Line, if required, will adequately minimize, mitigate, and/or compensate for any unavoidable adverse effects.

No construction activities seaward of the Dune Protection Line are proposed with this request and no adverse

effects to dunes or dune vegetation are expected.

(5) The proposed activity complies with any applicable requirements of: Requirements for Beachfront Construction Certificate and Dune Protection Permits and Management of the Public Beach of this Section; and

The application conforms to the City of Galveston requirements for a Beachfront Construction Certificate and Dune Protection Permit and the City requirements for the management of the public beach.

(6) The structure is located as far landward as practicable.

According to the site plan submitted by the applicant, the proposed structure abuts the 20-foot front setback line and is located as far landward as practicable.

The proposed construction is within the Enhanced Construction Zone, which is an area defined as being 125-feet landward of the Dune Conservation Area along Galveston's Gulf coast with an aggregate shoreline change of -2 to -8 feet per year. The City's Erosion Response Plan requires the following additional construction standards for any proposed construction activities within the Enhanced Construction Zone:

- Plans and certifications for proposed structures shall be sealed by a registered professional engineer licensed in the State of Texas, providing evidence of the adequacy of elevated building foundations and the proper placement, compaction, and protection of fill when used as construction for all newly constructed, substantially damaged, and substantially improved buildings elevated on pilings, posts, piers, or columns in accordance with the latest edition of specifications outlined in American Society of Civil Engineers, Structural Engineering Institute, Flood Resistant Design and Construction, ASCE 24-05.

<u>Staff Recommendation:</u>
Staff recommends approval of 20P-017 with the following conditions:

Specific Conditions to Case 20P-017:

1. The applicant is proposing to construct a dune walkover to extend across the property located seaward of the subject property. The applicant is not the legal property owner of the seaward lot. The applicant shall provide documentation to City staff stating the legal property owner of the seaward lot has authorized construction prior to the issuance of a beachfront permit for the proposed dune walkover;

2. A building permit for the driveway shall not be applied for until a TxDOT driveway permit has been issued and satisfies the requirement for all City departments;

3. Plans and certifications for proposed structures within the enhanced construction zone shall be sealed by a registered professional engineer licensed in the State of Texas, providing evidence of the adequacy of elevated building foundations and the proper placement, compaction, and protection of fill when used as construction for all newly constructed, substantially damaged, and substantially improved buildings elevated on pilings, posts, piers, or columns in accordance with the latest edition of specifications outlined in American Society of Civil Engineers, Structural Engineering Institute, Flood Resistant Design and Construction, ASCE 24-05;

4. The applicant shall adhere to all comments from the GLO included in Attachment "E":

    a. The City must minimize the proliferation of excessive private access by permitting only the minimum necessary number of private beach access points to the beach from any subdivision.

b. The applicant may not damage any dune vegetation or clear or remove any vegetation on either side of the proposed dune walkover for the purpose of facilitating construction.

c. The City must ensure the legal owner of the property where the dune walkover is proposed has authorized the proposed construction prior to issuing the coastal construction permit.

d. Dune walkovers may not impede or restrict public access to the beach at normal high tide. The applicant should terminate the dune walkover no farther seaward than the line of vegetation.

e. The City shall require the applicant to relocate the walkover to follow any landward migration of the public beach or seaward migration of the dunes.

f. The dune walkover shall be constructed at a height above the highest dune of not less than the width of the dune walkover and maintain this height over the entire dune area.

g. With the exception of the paired posts constructed on each side of the proposed dune walkover, the support posts must be placed at intervals no closer than six feet and in such a manner that new posts are not needed if the walkway requires relocation or elevation in the future.

h. The proposed dune walkover must be constructed to maintain ½-inch spacing between the slats to allow rain and sand to pass through the decking.

i. Concrete may not be used to stabilize the base of the pilings of the dune walkover.

j. Paving or altering the area between the line of vegetation and 25 feet landward of the north toe of the dune is not proposed and is prohibited.

k. Since the proposed single-family residence is located in an eroding area, paving may only be used under the habitable structure and for driveways connecting the habitable structure and the street. A habitable structure is defined as a structure used or usable for habitation. The area beneath uncovered decks or stairs may not be paved.

l. The driveway must be limited to the linear width of the primary structure, along the main street, and a minimum of 15% of the front yard must be maintained as open/unimproved area.

m. The City must ensure the proposed construction is located as far landward as practicable.

n. The City may only permit the applicant to construct an enclosure beneath the habitable structure if the walls are breakaway or louvered and the construction is consistent with the requirements of the National Flood Insurance Program.

o. The City must ensure the proposed construction is consistent with FEMA minimum requirements or with the FEMA approved local ordinance.

p. The City must ensure the proposed habitable structure is designed for feasible relocation.

q. The proposed construction activities must not result in the potential for increased flood damage to the proposed construction site or adjacent property, result in runoff or drainage patterns that aggravate erosion, cause significant changes to dune hydrology, adversely affect dune complexes or dune vegetation, or significantly increase the potential for washovers or blowouts to occur.

r. The proposed construction activities must minimize impacts on natural hydrology and not cause erosion of adjacent properties, critical dune areas, or the public beach.

s. Construction of the proposed dune walkover should conform to the GLO's guidelines provided in the Dune Protection and Improvement Manual for the Texas Gulf Coast, which is located at http://www.glo.texas.gov/coast/coastal-management/forms/files/dune-protection-manual-gpb.pdf

t. A dune restoration project is not proposed in this application and may not be conducted until a new or amended beachfront construction certificate and dune protection permit has been obtained to do so.

Additionally, the GLO provided the following recommendations included in Attachment "E":

u. The City may consider requesting that the applicant construct the dune walkover in a location where shared access may be provided to a neighboring property owner in the future;

v. The use of permeable materials, such as brick pavers, limestone, or gravel, is recommended for drives or parking areas.

Standard Conditions:

5. Upon completion of the development, and prior to the issuance of a "Certificate of Occupancy," for those structures requiring Planning Commission approval, the permittee shall provide the Development Services Department with a final survey indicating finished elevations, surfaces, drainage patterns, fences, dune walkovers and landscape detail, or certification by a registered professional engineer that all Permit conditions have been met. No "Certificate of Occupancy" shall be approved until the Development Services Department approves a "Certificate of Completion," verifying that all Permit conditions have been satisfied;

6. Work approved under this permit shall be completed within one (1) year from the date this permit is issued. If work is not completed in this time period, it will be necessary for the applicant to reapply for a Beachfront Construction Certificate/Dune Protection Permit, unless an extension of the period, prior to the expiration, has been submitted to the Texas General Land Office for review and approved by the City;

7. The applicant shall adhere to all comments/conditions received from city departments. Should conformance with the comments/conditions require alterations to the project, as approved, the case must be returned to the Planning Commission for additional review and approval;

8. All non-natural drainage from the dwelling shall be directed away from the beach and dunes, toward the street landward of the lot and to the drainage infrastructure in the subdivision, and drainage plans shall be submitted to the City of Galveston Public Works Department, Division of Engineering for approval;

9. The area seaward of the dwelling shall be designated a dune protection area, prohibiting any alteration of natural conditions in this area, except for any future proposed dune walkovers, approved by the Development Services Department and the Texas General Land Office under separate review;

10. The applicant shall coordinate any/all dune enhancement plans with the Development Services Department; and,

11. The applicant must adhere to all aspects of Section 29: Planning-Beach Access Dune Protection & Beachfront

Construction.

ERP PRACTICABLE DEFINITION

Practicable means available and capable of being done after taking into consideration existing building practices, siting alternatives, and the footprint of the structure in relation to the area of the building portion of the lot, and considering the overall development plan for the property.

TEXAS ADMINISTRATIVE CODE PRACTICABLE DEFINITION 15.2(57)

In determining what is practicable, local governments shall consider the effectiveness, scientific feasibility, and commercial availability of the technology or technique. Local governments shall also consider the cost of the technology or technique.

Respectfully Submitted,

Virginia Greb 05/14/2020

Virginia Greb
Coastal Resources Assistant Manager
Date

05/14/2020

Catherine Gorman, AICP
Assistant Planning Director / HPO
Date

24131 San Luis Pass Rd.
Case #20P-017

BEG

Legend

End Point Rate (ft/yr)

- Eroding (-1ft or more)
- Stable (-1 to +1ft)
- Accreting (+1ft or more)
- Parcels
- Subdivisions

0 50 100 200 300 Feet

1 inch = 172 feet

Data Sources:

2018 Aerial Imagery and Parcel Data from Galveston CAD, Shoreline Change Data from U.T. Bureau of Economic Geology, Flood Insurance Rate Map from FEMA.

Map prepared by the City of Galveston Development Services Department (VGreb) - 4/24/2020

This product is for informational purposes and may not have been prepared for or be suitable for legal, engineering, or surveying purposes. It does not represent an on-the-ground survey and represents only the approximate relative location of property boundaries.

The data presented on these pages is not legally binding on the City of Galveston or any of its departments. These maps and the associated data are representations ONLY and may contain errors in the databases.

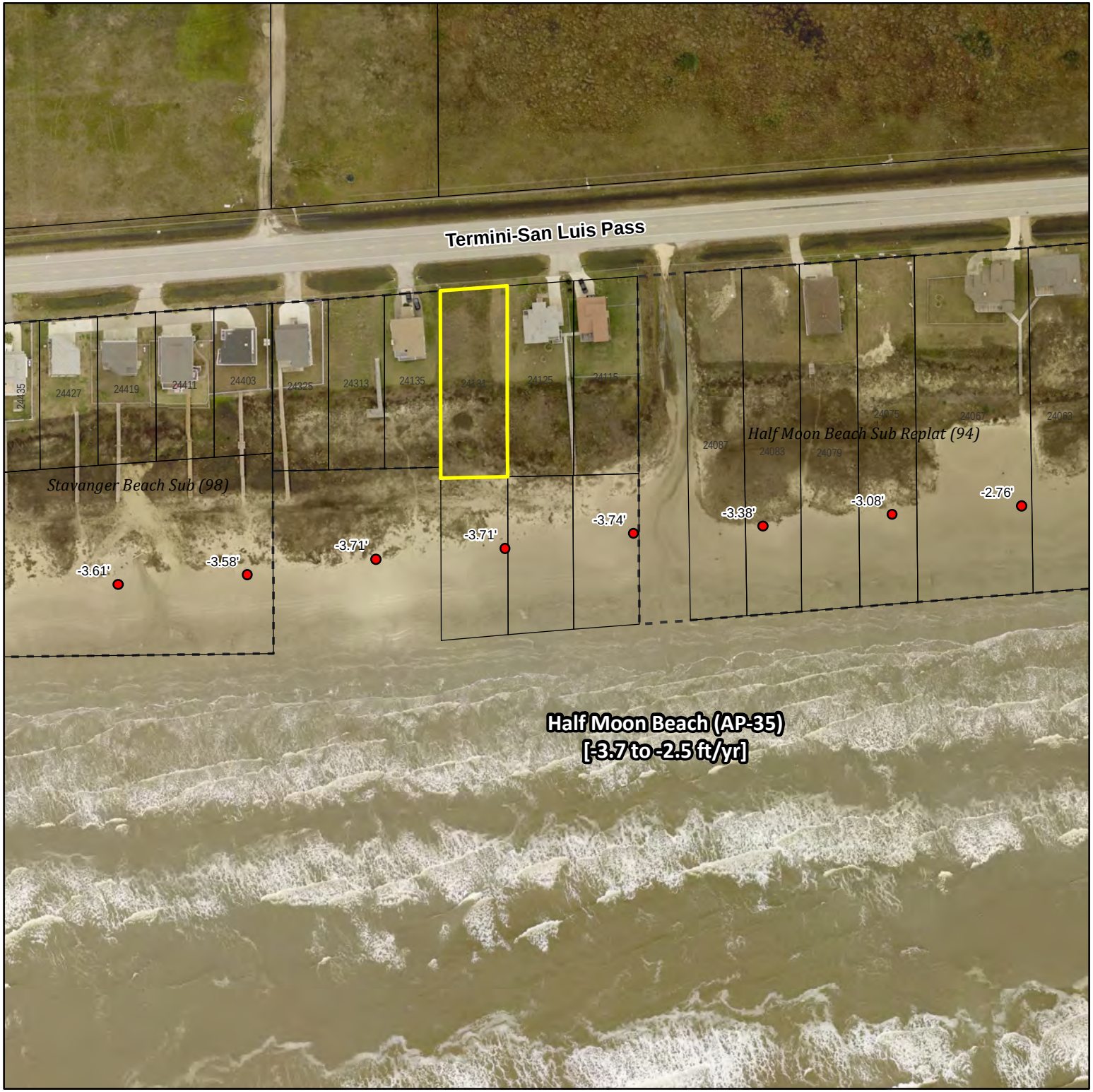

SCALE: 1 INCH = 30 FEET

TOPOGRAPHIC SURVEY
24131 SAN LUIS PASS ROAD
GALVESTON TX

BEING A TRACT OF LAND OUT OF THAT CERTAIN 1.39 ACRES OUT OF DIVISION 3, SECTION 13, HALL AND JONES SURVEY OF GALVESTON ISLAND, SAID 1.39 ACRES BEING DESCRIBED UNDER FILM CODE 001-32-0667 AND REFILED UNDER FILM CODE 001-41-2137, DEED RECORDS OF GALVESTON COUNTY, TEXAS

I, Christopher Trusky, Registered Professional Land Surveyor in the State of Texas, hereby certify that this plat represents a survey made on the ground under my direction and supervision on April 6, 2020. At the time of this survey there were no encroachments, conflicts or protrusions apparent on the ground, EXCEPT AS SHOWN. THIS SURVEY IS CERTIFIED FOR THIS TRANSACTION ONLY.

Christopher Trusky
RPLS No. 5247
Land Survey Co. LLC
P.O. Box 128, Kemah TX 77565
Firm Reg. No. 10045700
281-338-4008

STATE OF TEXAS
REGISTERED
CHRISTOPHER TRUSKY
5247
PROFESSIONAL
LAND SURVEYOR

Notes:
According to FIRM Community Panel No. 48167C0557G, dated 8/15/2019, this property lies in Flood Zone VE, which is considered to be within the Special Flood Hazard Area. Surveyor makes no representation as to whether or not this property may flood.

Basis of bearings is the right of way of San Luis Pass Road, as described in vesting deed.

Other matters or encumbrances affecting the subject property, if any, are not shown.

Elevations shown hereon are referenced to the published elevation of NGS BM AW0627 (NAVD 88 DATUM).

4" FIBERCRETE
DRIVEWAY & SLAB

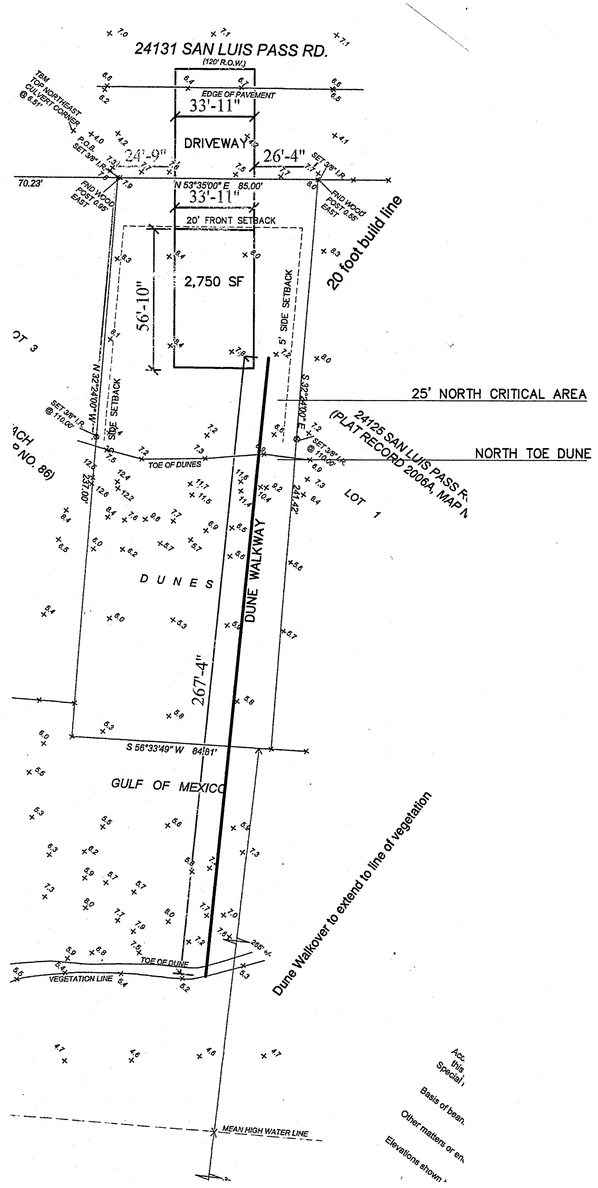

STATE OF TEXAS
RODNEY LEE SLATON
90298
REGISTERED
PROFESSIONAL ENGINEER

The seal appearing on this document was authorized by RODNEY LEE SLATON P.E. 90298, on 4-30-20

FLOOD STATEMENT

THE PROJECT IS LOCATED WITHIN VE 16 PER FIRM MAP 48167C0577, SUFFIX G, DATED, AUGUST 15, 2019.

ELEVATIONS

ELEVATIONS ARE BASED ON NAVD 1988, 2001 ADJUSTMENT.

THE BEARING BASIS SHOWN HEREON IS THE TEXAS COORDINATE SYSTEM OF 1983, SOUTH CENTRAL ZONE (4204) AND IS TIED TO HARRIS COUNTY FLOODPLAIN REFERENCE MARK NUMBERS 020165 AND 010310.

LEGAL DESCRIPTION:

ABSTRACT 121 HALL & JONES SURVEY
TRACT 19

3/17/20	1st SUBMITTAL		

TRINITY BAY ENGINEERING
PLANNING–ENGINEERING–MANAGEMENT
911 S. 8th STREET
LA PORTE, TEXAS 77571
OFFICE 281-515-1065
CELL 281-827-3929
E-MAIL rodney@trinitybayengineering.com
TBPE # 18351

EDGEWOOD VENTURES

SITE PLAN
FOR 2,750 SF SINGLE-FAMILY RESIDENTIAL @
24131 SAN LUIS PASS ROAD
JAMAICA BEACH, TEXAS 77554

CAD FILE	SITE PLAN
PLOT DATE	10/19
DWN	RLS
CKD	RLS
APPD	RLS
SCALE	1"=30'
JOB NO.	--
SHEET	C.1

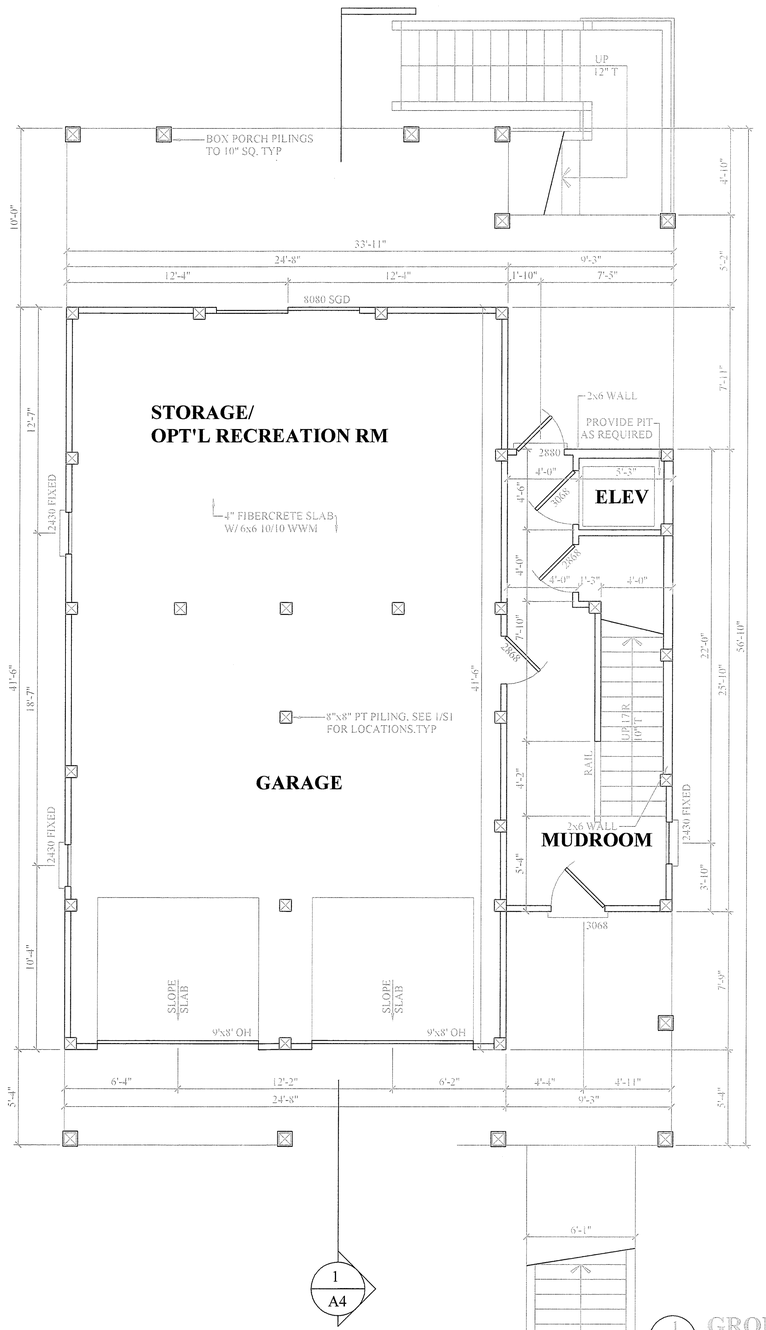

1 A1 GROUND FLOOR PLAN

1/4"=1'-0"

NOTES:
1) 9'-0" CEILING HT
2) SEE ELEVATIONS FOR WINDOW HEAD HEIGHTS
3) DIMENSIONS ARE TO FRAMING
4) DOOR & WINDOW SIZE CLARIFICATION EXAMPLE:
2468 = 2'-4" x 6'-8" (NOMINAL SIZE)
5) CONTRACTOR TO VERIFY R.O. REQUIREMENTS FOR ELEVATOR

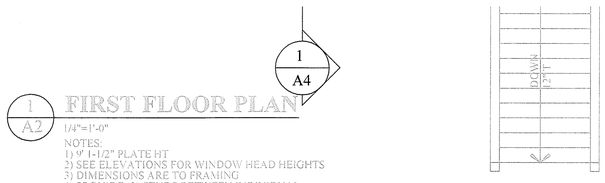

1 A2 FIRST FLOOR PLAN

1/4"=1'-0"

NOTES:
1) 9' 1-1/2" PLATE HT
2) SEE ELEVATIONS FOR WINDOW HEAD HEIGHTS
3) DIMENSIONS ARE TO FRAMING
4) PROVIDE (2) STUDS BETWEEN INDIVIDUAL
WINDOW UNITS WHERE MULTIPLE UNITS ARE INDICATED
5) DOOR & WINDOW SIZE CLARIFICATION EXAMPLE:
2468 = 2'-4" x 6'-8" (NOMINAL SIZE)
6) EXTERIOR WALLS ARE 2x6
7) CONTRACTOR TO VERIFY R.O. REQUIREMENTS FOR ELEVATOR

STATE OF TEXAS
RODNEY LEE SLATON
90298
REGISTERED
PROFESSIONAL ENGINEER

The seal appearing on this document was authorized by RODNEY LEE SLATON P.E. 90298, on 9-22-20

FLOOD STATEMENT

THE PROJECT IS LOCATED WITHIN VE 16
PER FIRM MAP 48167C0577, SUFFIX G, DATED,
AUGUST 15, 2019.

ELEVATIONS

ELEVATIONS ARE BASED ON NAVD 1988, 2001 ADJUSTMENT.

THE BEARING BASIS SHOWN HEREON IS THE TEXAS COORDINATE SYSTEM OF 1983, SOUTH CENTRAL ZONE (4204) AND IS TIED TO HARRIS COUNTY FLOODPLAIN REFERENCE MARK NUMBERS 020165 AND 010310.

3/17/20	1st SUBMITTAL		

TRINITY BAY ENGINEERING
PLANNING–ENGINEERING–MANAGEMENT
911 S. 8th STREET
LA PORTE, TEXAS 77571
OFFICE 281–515–1065
CELL 281–827–3929
E–MAIL rodney@trinitybayengineering.com
TBPE # 18351

CAD FILE	SITE PLAN
PLOT DATE	10/19
DWN	RLS
CKD	RLS
APPD	RLS
SCALE	1/4"=1'
JOB NO.	--
SHEET	A.1

EDGEWOOD VENTURES

GROUND & 1ST FLOOR FLOOR PLAN
FOR 2,750 SF SINGLE–FAMILY RESIDENTIAL ©
24131 SAN LUIS PASS ROAD
JAMAICA BEACH, TEXAS 77554

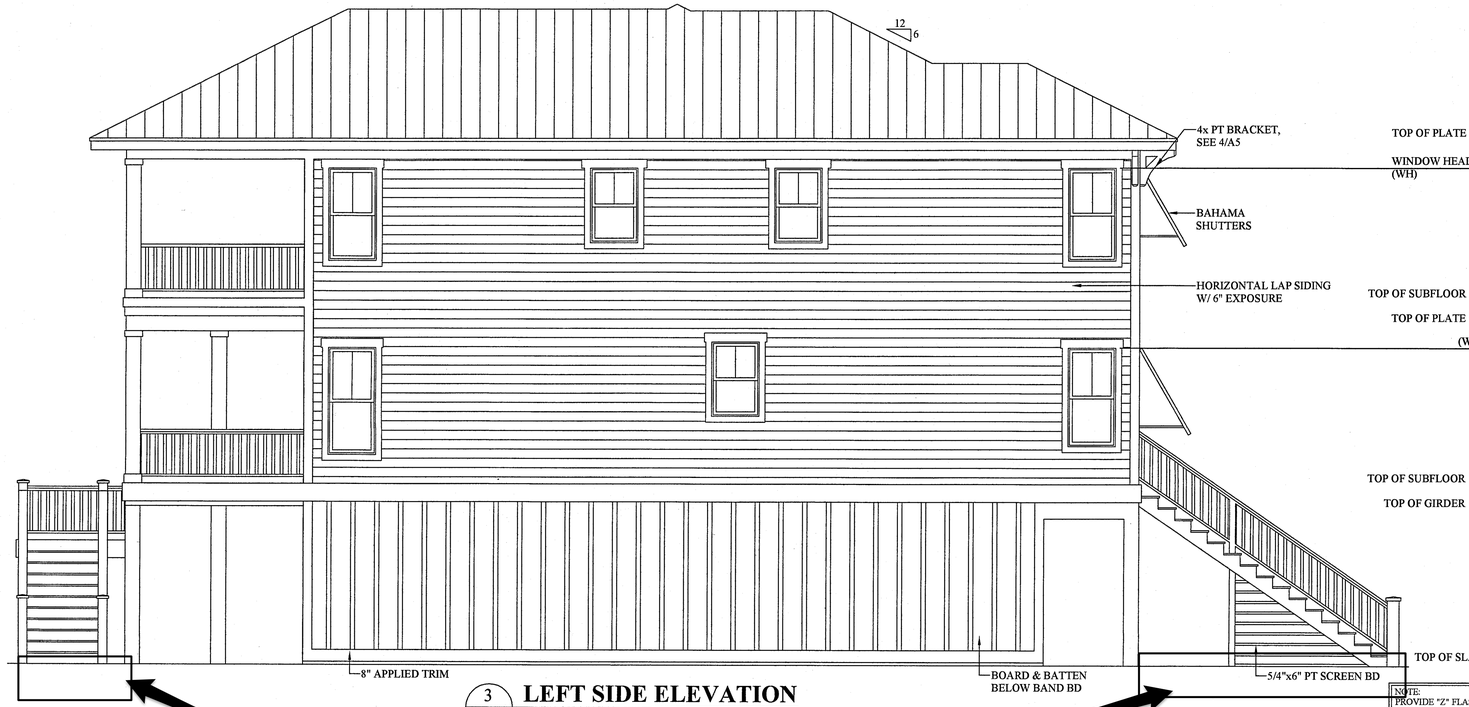

3 / A3 **LEFT SIDE ELEVATION**
1/4"=1'-0"

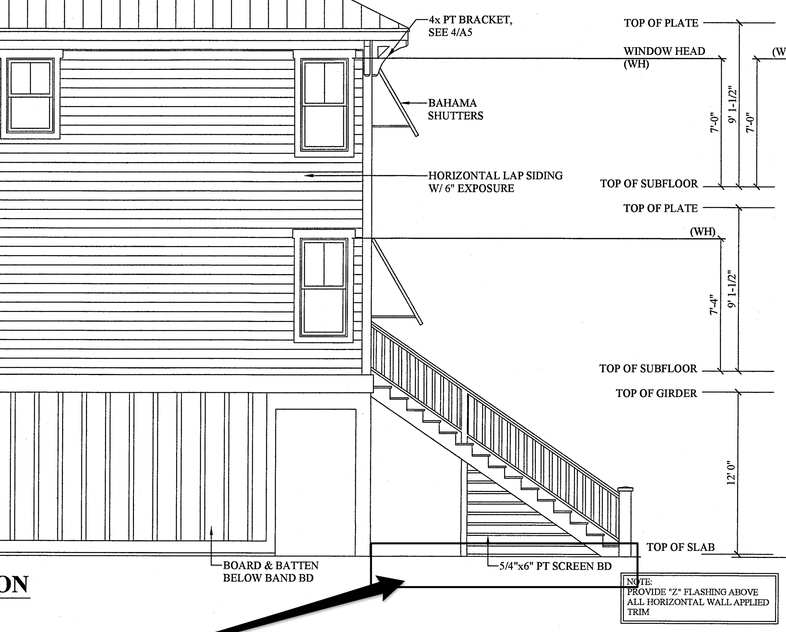

NOTE:
PROVIDE "Z" FLASHING ABOVE ALL HORIZONTAL WALL APPLIED TRIM

4 / A3 **REAR ELEVATION**
1/4"=1'-0"

No paving outside habitable area

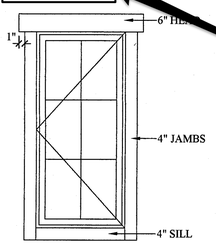

5 / A3 **CASING DETAIL**
1/2"=1'-0"

STATE OF TEXAS
RODNEY LEE SLATON
90298
REGISTERED PROFESSIONAL ENGINEER

The seal appearing on this document was authorized by RODNEY LEE SLATON P.E. 90298, on 3-23-20

FLOOD STATEMENT

THE PROJECT IS LOCATED WITHIN VE 16 PER FIRM MAP 48167C0577, SUFFIX G, DATED, AUGUST 15, 2019.

ELEVATIONS

ELEVATIONS ARE BASED ON NAVD 1988, 2001 ADJUSTMENT.

THE BEARING BASIS SHOWN HEREON IS THE TEXAS COORDINATE SYSTEM OF 1983, SOUTH CENTRAL ZONE (4204) AND IS TIED TO HARRIS COUNTY FLOODPLAIN REFERENCE MARK NUMBERS 020165 AND 010310.

3/17/20	1st SUBMITTAL		

TRINITY BAY ENGINEERING
PLANNING–ENGINEERING–MANAGEMENT
911 S. 8th STREET
LA PORTE, TEXAS 77571
OFFICE 281–515–1065
CELL 281–827–3929
E–MAIL rodney@trinitybayengineering.com
TBPE # 18351

EDGEWOOD VENTURES

LEFT & REAR ELEVATIONS
FOR 2,750 SF SINGLE–FAMILY RESIDENTIAL ©
24131 SAN LUIS PASS ROAD
JAMAICA BEACH, TEXAS 77554

CAD FILE	SITE PLAN
PLOT DATE	10/19
DWN	RLS
CKD	RLS
APPD	RLS
SCALE	1/4"=1'
JOB NO.	--
SHEET	A.3

2 / A3 **RIGHT SIDE ELEVATION**
1/4"=1'-0"

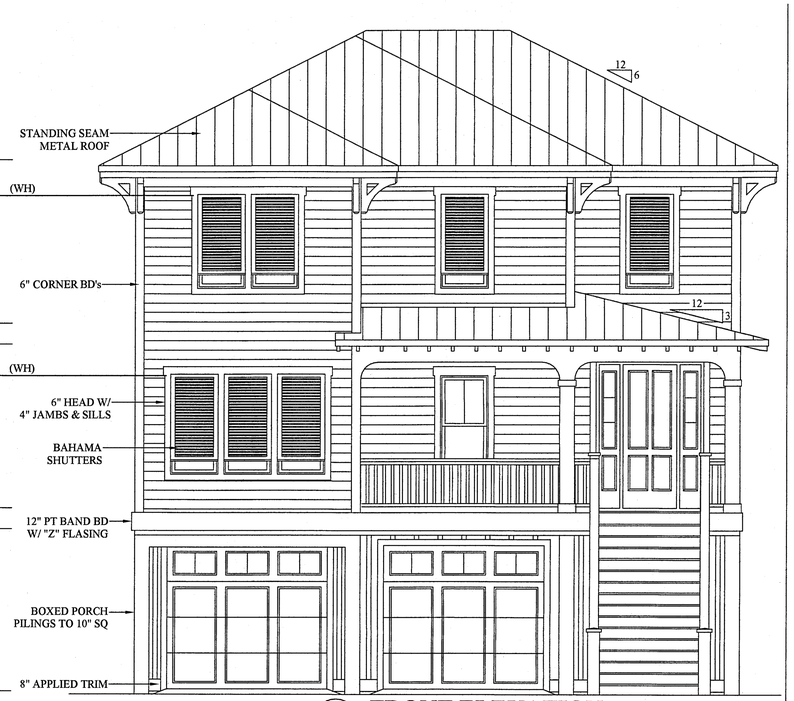

1 / A3 **FRONT ELEVATION**
1/4"=1'-0"

No paving outside of habitable structure

STATE OF TEXAS
RODNEY LEE SLATON
90298
REGISTERED
PROFESSIONAL ENGINEER

The seal appearing on this document was authorized by RODNEY LEE SLATON P.E. 90298, on 3-17-20

FLOOD STATEMENT

THE PROJECT IS LOCATED WITHIN VE 16 PER FIRM MAP 48167C0577, SUFFIX G, DATED, AUGUST 15, 2019.

ELEVATIONS

ELEVATIONS ARE BASED ON NAVD 1988, 2001 ADJUSTMENT.

THE BEARING BASIS SHOWN HEREON IS THE TEXAS COORDINATE SYSTEM OF 1983, SOUTH CENTRAL ZONE (4204) AND IS TIED TO HARRIS COUNTY FLOODPLAIN REFERENCE MARK NUMBERS 020165 AND 010310.

3/17/20	1st SUBMITTAL		

TRINITY BAY ENGINEERING
PLANNING–ENGINEERING–MANAGEMENT
911 S. 8th STREET
LA PORTE, TEXAS 77571
OFFICE 281–515–1065
CELL 281–827–3929
E–MAIL rodney@trinitybayengineering.com
TBPE # 18351

EDGEWOOD VENTURES

RIGHT & FRONT ELEVATIONS
FOR 2,750 SF SINGLE–FAMILY RESIDENTIAL @
24131 SAN LUIS PASS ROAD
JAMAICA BEACH, TEXAS 77554

CAD FILE	SITE PLAN
PLOT DATE	10/19
DWN	RLS
CKD	RLS
APPD	RLS
SCALE	1/4"=1'
JOB NO.	--
SHEET	A.4

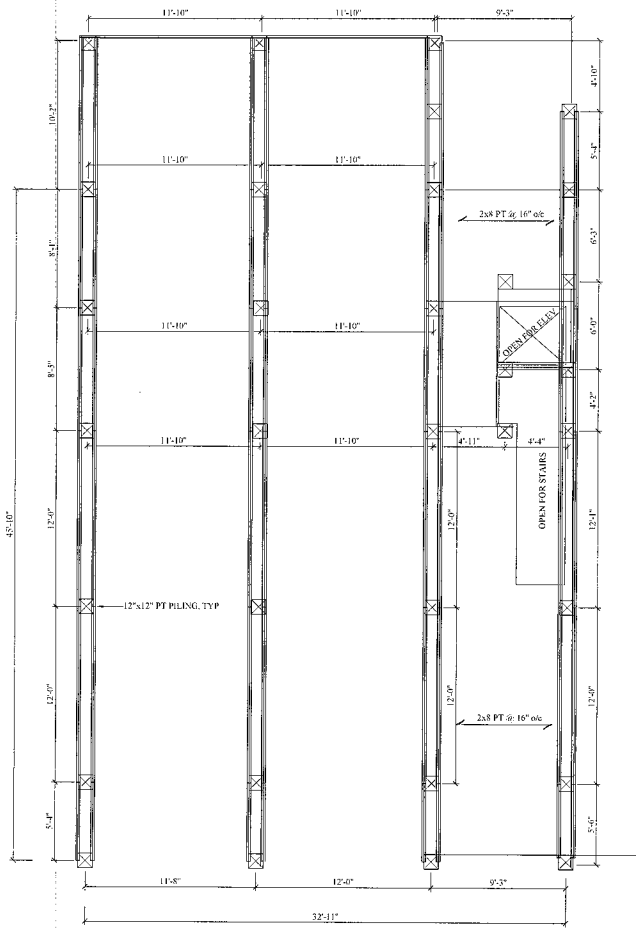

FOUNDATION PLAN

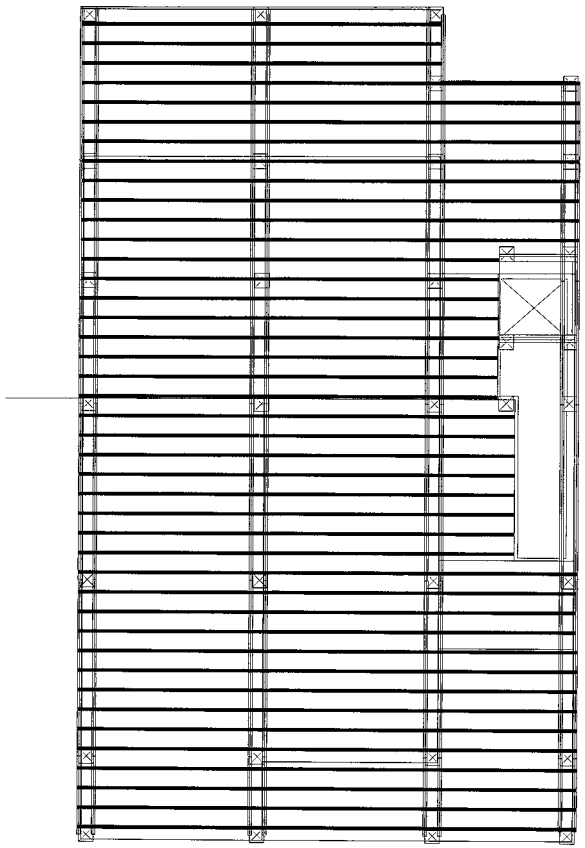

GROUND FLOOR CEILING JOIST

STATE OF TEXAS
RODNEY LEE SLATON
90298
REGISTERED
PROFESSIONAL ENGINEER

The seal appearing on this document was authorized by RODNEY LEE SLATON P.E. 90298, on 3-17-20

FLOOD STATEMENT

THE PROJECT IS LOCATED WITHIN VE 16 PER FIRM MAP 48167C0577, SUFFIX G, DATED, AUGUST 15, 2019.

ELEVATIONS

ELEVATIONS ARE BASED ON NAVD 1988, 2001 ADJUSTMENT.

THE BEARING BASIS SHOWN HEREON IS THE TEXAS COORDINATE SYSTEM OF 1983, SOUTH CENTRAL ZONE (4204) AND IS TIED TO HARRIS COUNTY FLOODPLAIN REFERENCE MARK NUMBERS 020165 AND 010310.

3/17/20	1st SUBMITTAL	

TRINITY BAY ENGINEERING
PLANNING–ENGINEERING–MANAGEMENT
911 S. 8th STREET
LA PORTE, TEXAS 77571
OFFICE 281-515-1065
CELL 281-827-3928
E-MAIL rodney@trinitybayengineering.com
TBPE # 18351

EDGEWOOD VENTURES

FOUNDATION & GROUND FLOOR CEILING JOIST PLAN
FOR 2,750 SF SINGLE–FAMILY RESIDENTIAL @
24131 SAN LUIS PASS ROAD
JAMAICA BEACH, TEXAS 77554

CAD FILE	SITE PLAN
PLOT DATE	10/12
DWN	RLS
CKD	RLS
APPD	RLS
SCALE	1/4"=1'
JOB NO.	--
SHEET	S.1

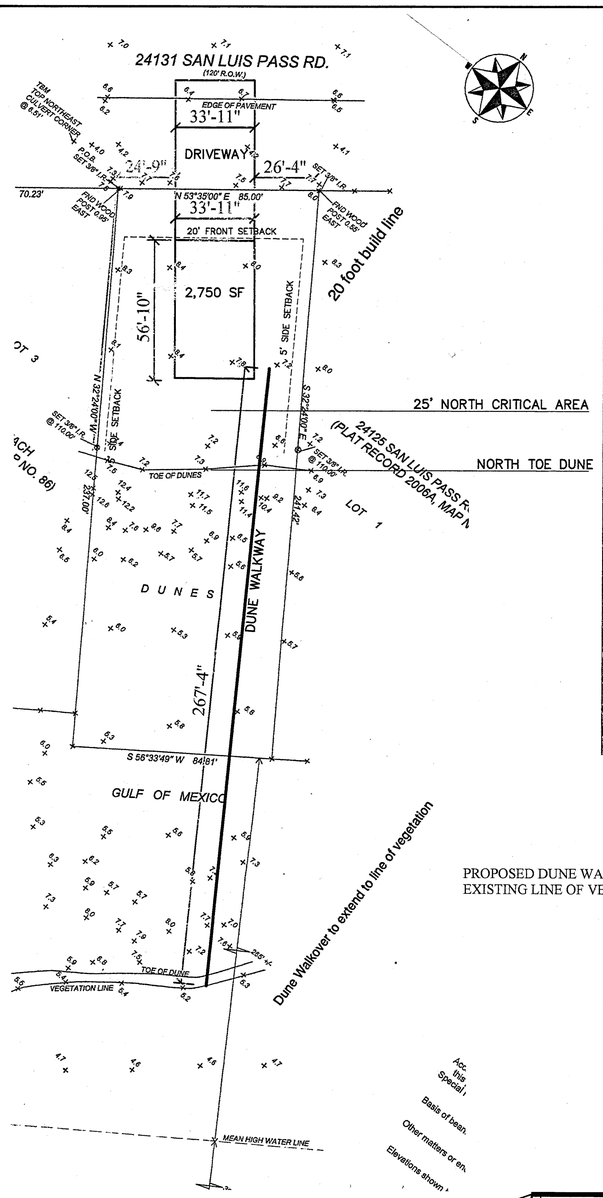

The structure's height should be at least one to one and a half times its width (three feet minimum) to allow sunlight to reach vegetation underneath. In any case, the deck of the walkover must be of sufficient elevation to accommodate the expected increase in dune height.

Space the slats forming the deck of the walkover 1/2 inch apart so that sunlight and rainfall can penetrate to plants below and so that sand will not accumulate on the deck.

Place the supporting piers as far apart as possible along the length of the structure. A distance of at least six feet between pairs of piers is recommended. Implant the piers at least three feet in the ground to ensure stability. A depth of five feet or more is advisable to allow for erosion around the piers during storms. Install the piers with a hand auger or posthole digger rather than with a tractor. Walkover piers should not be set with cement. Repair damage to the dune area as soon as possible.

Providing handrails on both sides of the walkover is recommended as a safety measure and to discourage people from jumping off into the dunes. Railings are particularly advisable on public walkovers and those that are high above the ground. Railings should be at least three feet high.

To enable wheelchair use on a walkover, inclined ramps with a 20 percent slope (a one-foot rise for every five feet in length) may be built at each end of the structure. Ramps are recommended for any large public walkover.

Walkovers should be inspected on a regular basis and promptly repaired as needed. To avoid damage, workers should enter the dune area on foot rather than by vehicle.

Common walkover structures are preferred for subdivisions to minimize damage to dunes by the proliferation of walkovers.

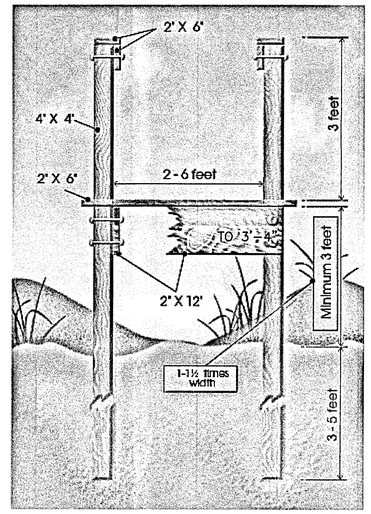

Figure 24. Construction details for a dune walkover.

4x4 POSTS ON 10' CENTERS

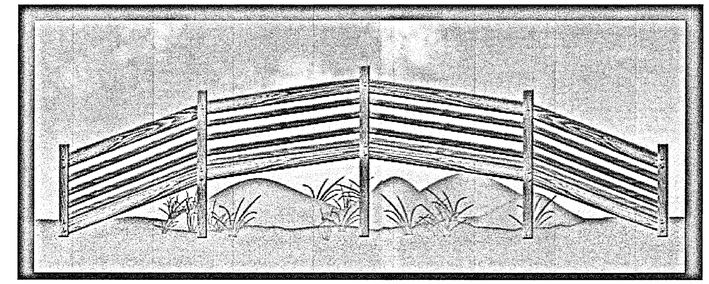

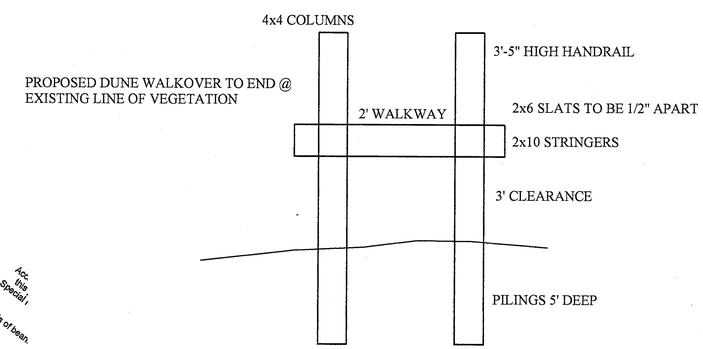

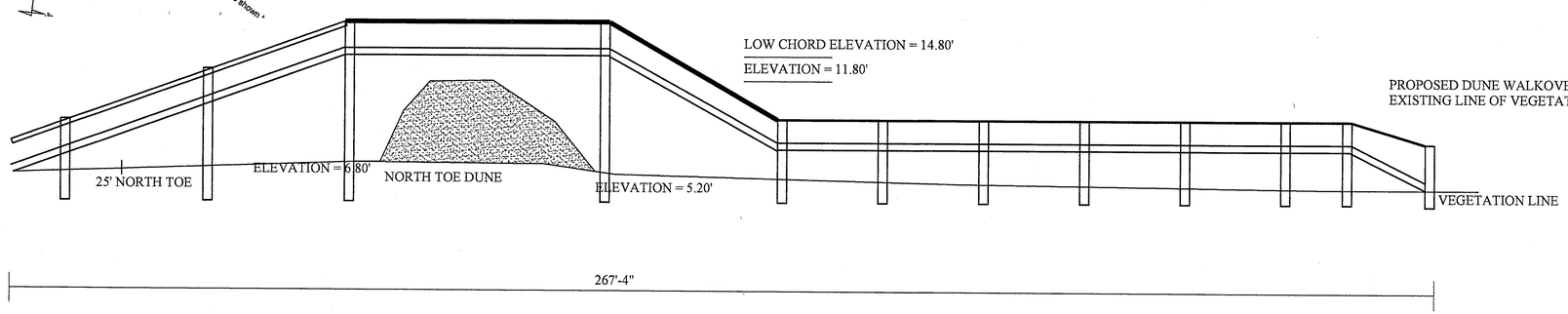

STATE OF TEXAS
RODNEY LEE SLATON
90298
REGISTERED
PROFESSIONAL ENGINEER

The seal appearing on this document was authorized by RODNEY LEE SLATON P.E. 90298, on 4-30-20

FLOOD STATEMENT

THE PROJECT IS LOCATED WITHIN VE 16 PER FIRM MAP 48167C0577, SUFFIX G, DATED, AUGUST 15, 2019.

ELEVATIONS

ELEVATIONS ARE BASED ON NAVD 1988, 2001 ADJUSTMENT.

THE BEARING BASIS SHOWN HEREON IS THE TEXAS COORDINATE SYSTEM OF 1983, SOUTH CENTRAL ZONE (4204) AND IS TIED TO HARRIS COUNTY FLOODPLAIN REFERENCE MARK NUMBERS 020165 AND 010310.

3/17/20	1st SUBMITTAL		

TRINITY BAY ENGINEERING
PLANNING–ENGINEERING–MANAGEMENT
911 S. 8th STREET
LA PORTE, TEXAS 77571
OFFICE 281–515–1085
CELL 281–827–3929
E–MAIL rodney@trinitybayengineering.com
TBPE # 18351

EDGEWOOD VENTURES

DUNE WALKOVER PLAN
FOR 2,750 SF SINGLE–FAMILY RESIDENTIAL @
24131 SAN LUIS PASS ROAD
JAMAICA BEACH, TEXAS 77554

CAD FILE	SITE PLAN
PLOT DATE	10/19
DWN	RLS
CKD	RLS
APPD	RLS
SCALE	1/4"=1'
JOB NO.	--
SHEET	S.7

Looking South Front of Property

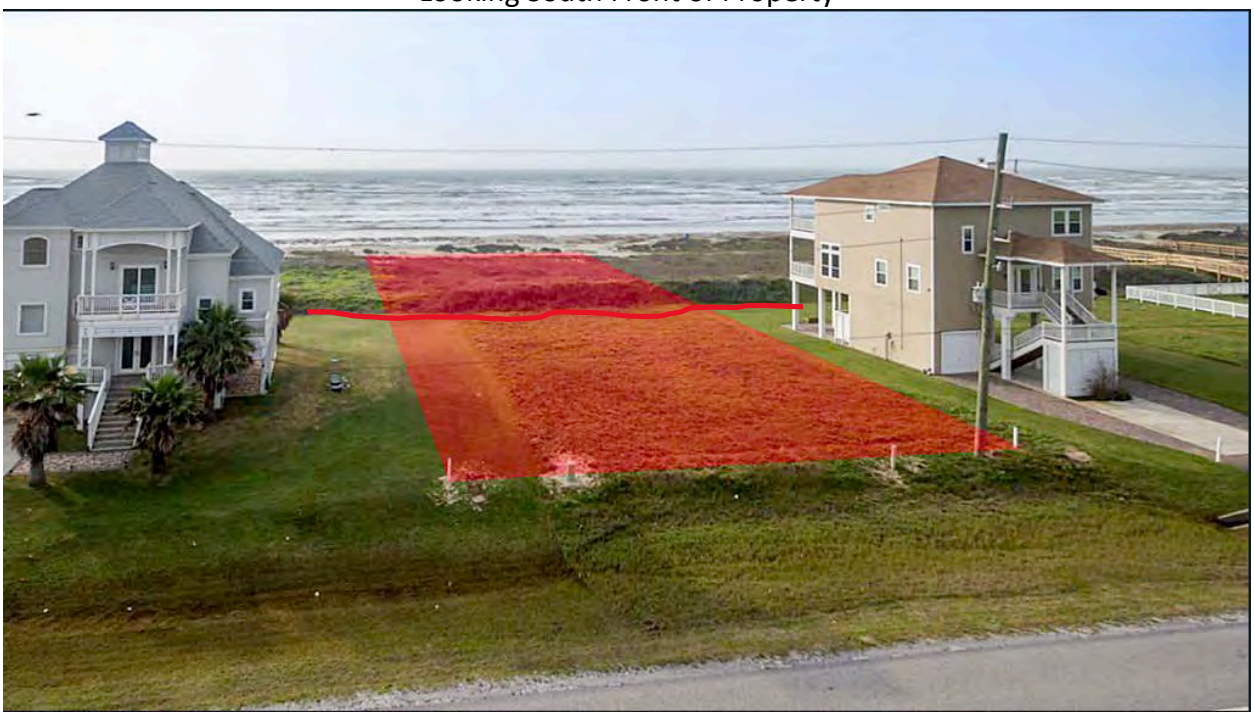

Looking SouthWest Front of Property, North Toe Dune Line
04/17/2020

Looking West, East Side of Property

Looking East, West Side of Property, Dune Line
04/17/2020

Looking North, From Beach Vegetation Line

Looking South, North Toe of Dune
04/17/2020

TEXAS GENERAL LAND OFFICE
GEORGE P. BUSH, COMMISSIONER

May 6, 2020

Via Electronic Mail

Virginia Greb
Coastal Resources Assistant Manager
Development Services Department
City of Galveston
823 Rosenberg, Room 401
Galveston, Texas 77550-2103

Beachfront Construction Certificate and Dune Protection Permit in the City of Galveston

Site Address:	24131 San Luis Pass Rd, Galveston
Legal Description:	ABST 121 Hall & Jones Sur TR 0.466 Acres; ABST 121 Hall & Jones Sur TR 20 0.394 Acres
Lot Applicant:	Kai Adkins c/o Edgewood Ventures, LLC
Case Number:	20P-017
GLO ID No.:	BDCOG-20-0127

Dear Ms. Greb:

The General Land Office (GLO) has reviewed the application materials for a beachfront construction certificate and dune protection permit for the above-referenced location. The applicant proposes to construct a single-family residence with a fibercrete driveway. The applicant also proposes to construct a 3-foot-wide private dune walkover. The proposed single-family residence is located more than 200 feet landward of the line of vegetation, within the Enhanced Construction Zone, and adjacent to the Dune Conservation Area. According to the Bureau of Economic Geology, the area is eroding at a rate of three to four feet per year.

Based on the information provided to our office for review, we have the following comments:

- The City must minimize the proliferation of excessive private access by permitting only the minimum necessary number of private beach access points to the beach from any subdivision.[1] The City may consider requesting that the applicant construct the dune walkover in a location where shared access may be provided to a neighboring property owner in the future.

- The applicant may not damage any dune vegetation or clear or remove any vegetation on either side of the proposed dune walkover for the purpose of facilitating construction.[2]

[1] 31 Tex. Admin. Code § 15.4(f)(2)(B)(iii).
[2] 31 Tex. Admin. Code § 15.4(f)(1).

- The City must ensure the legal owner of the property where the dune walkover is proposed has authorized the proposed construction prior to issuing the coastal construction permit.

- Dune walkovers may not impede or restrict public access to the beach at normal high tide.[3] The applicant should terminate the dune walkover no farther seaward than the line of vegetation.

- The City shall require the applicant to relocate the walkover to follow any landward migration of the public beach or seaward migration of the dunes.[4]

- The dune walkover shall be constructed at a height above the highest dune of not less than the width of the dune walkover and maintain this height over the entire dune area.[5]

- With the exception of the paired posts constructed on each side of the proposed dune walkover, the support posts must be placed at intervals no closer than six feet and in such a manner that new posts are not needed if the walkway requires relocation or elevation in the future.[6]

- The proposed dune walkover must be constructed to maintain ½-inch spacing between the slats to allow rain and sand to pass through the decking.[7]

- Concrete may not be used to stabilize the base of the pilings of the dune walkover.[8]

- Paving or altering the area between the line of vegetation and 25 feet landward of the north toe of the dune is not proposed and is prohibited.[9]

- Since the proposed single-family residence is located in an eroding area, paving may only be used under the habitable structure and for driveways connecting the habitable structure and the street.[10] A habitable structure is defined as a structure used or usable for habitation. [11] The area beneath uncovered decks or stairs may not be paved.

- The driveway must be limited to the linear width of the primary structure, along the main street, and a minimum of 15% of the front yard must be maintained as open/unimproved area.[12]

- The use of permeable materials, such as brick pavers, limestone, or gravel, is recommended for drives or parking areas.[13]

---

[3] Tex. Admin. Code § 15.7(g)(2).
[4] Tex. Admin. Code § 15.7(g)(4).
[5] City of Galveston Beach Access and Dune Protection Plan § 29-90(e)(1).
[6] City of Galveston Beach Access and Dune Protection Plan § 29-90(e)(2).
[7] City of Galveston Beach Access and Dune Protection Plan § 29-90(e)(5).
[8] Tex. Admin. Code § 15.7(f)(3).
[9] City of Galveston Beach Access and Dune Protection Plan § 29-90(m)(2).
[10]City of Galveston Beach Access and Dune Protection Plan § 29-90(m)(2).
[11] City of Galveston Beach Access and Dune Protection Plan § 29-54.
[12] City of Galveston Erosion Response Plan § 5.
[13] 31 Tex. Admin. Code § 15.5(b)(3).

- The City must ensure the proposed construction is located as far landward as practicable.[14]

- The City may only permit the applicant to construct an enclosure beneath the habitable structure if the walls are breakaway or louvered and the construction is consistent with the requirements of the National Flood Insurance Program.[15]

- The City must ensure the proposed construction is consistent with FEMA minimum requirements or with the FEMA approved local ordinance.[16]

- The City must ensure the proposed habitable structure is designed for feasible relocation.[17]

- The proposed construction activities must not result in the potential for increased flood damage to the proposed construction site or adjacent property, result in runoff or drainage patterns that aggravate erosion, cause significant changes to dune hydrology, adversely affect dune complexes or dune vegetation, or significantly increase the potential for washovers or blowouts to occur.[18]

- The proposed construction activities must minimize impacts on natural hydrology and not cause erosion of adjacent properties, critical dune areas, or the public beach.[19]

- Construction of the proposed dune walkover should conform to the GLO's guidelines provided in the Dune Protection and Improvement Manual for the Texas Gulf Coast, which is located at http://www.glo.texas.gov/coast/coastal-management/forms/files/dune-protection-manual-gpb.pdf.

- A dune restoration project is not proposed in this application and may not be conducted until a new or amended beachfront construction certificate and dune protection permit has been obtained to do so.

If you have any questions, please contact me at (512) 463-5232 or at michelle.culver@glo.texas.gov.

Sincerely,

Michelle Culver
Beach Access & Dune Protection Program
Coastal Resources Division
Texas General Land Office

cc: Dustin Henry, Coastal Resources Manager

---

[14] City of Galveston Erosion Response Plan § 5 & 31 Tex. Admin. Code § 15.6(b).
[15] 31 Tex. Admin. Code § 15.6(f)(4).
[16] 31 Tex. Admin. Code § 15.6(e)(3).
[17] 31 Tex. Admin. Code § 15.6(f)(2).
[18] 31 Tex. Admin. Code § 15.4(d).
[19] 31 Tex. Admin. Code § 15.6(g).