City of Galveston Utility Permit Sequence

Phase	No.	Protocol Steps for Utility Aerial & Boring ROW Construction Permit Job Name or #_____ Job Address _____	1. Completed "C" 2. Incomplete "I" 3. Not Applicable "NA" engineering@galvestontx.gov (To be signed by the applicant and emailed to Engineering Division)
1	A.	Applicant submits signed UPS & ROW Construction permit, include route map/aerial showing proposed utility route to cause least impact on businesses, residences and traffic. ***Boring in paved roads and behind curb; exceptions granted based on site specific evaluation***. ***(No fee if City of Galveston Franchise Utility).***	
1	B.	Engineering reviews ROW Construction Permit Application with route map in **GPS State Plane Coordinates**, provided by applicant, and send back City Utility map with first conditional approval.	
2	1.	Design Engineer (TX P.E.) shall prepare Sealed Design Plans and Profiles showing the engineered route and the GPS coordinates of the proposed alignment and utility conflicts (Ref: www.tbpe.state.tx.us or http://engineers.texas.gov/). Please have a licensed surveyor (RPLS) perform a current field ROW/Boundary Survey and a topographic survey that shows all utilities reflected in the boundary survey. A subsurface utility investigation (SUE) utilizing ground penetrating radar (GPR), electrical resistivity surveys, pot-holing or other SUE methods, is mandatory, to detect buried utilities, and the results of this investigation should be shown on the plans, and paint-marked in the field for City inspection. Plans shall certify completion of SUE. All open cut including bore/tunnel pit areas should be shown hatched on design plans. Traffic Control Plans required per TMUTCD if traffic and pedestrian flow changes from current are planned during construction. Provide TCP to engineering prior to construction. Open cut/bore-tunnel pits shall be marked as construction zone with appropriate barricades and signage regardless of whether it is in the main street, alley, or behind the curb to protect the public per TMUTCD ***SW3P may be required. See notes on page 2.***	
2	2.	Required permits or approvals in writing from TXDOT, UTMB, Coast Guard, Port of Galveston, etc., required, if in their ROW **(copy provided to Engineering).**	
3	1.	Contractor shall notify Texas One Call at (713) 432 – 0365 or 811 and Lone Star Notification Center at 800-545-6005 or file online at: http://www.lonestar811.com/ at ***least 48 hours in advance*** **(Copy provided to engineering).**	
3	2.	Advance coordination with local businesses and citizens affected by the project and immediately adjacent **(flyer or door hanger copy provided to engineering).**	
3	3.	Contractor shall paint mark the alignment of the bore (white paint with letters "proposed"), in the field, and notify Engineering Division for field observation along with the Utilities Superintendent and obtain clearance prior to performing any utility work in the field (Ref: http://www.callbeforeyoudig.org/apwa-color-code.asp). The line alignment proposed shall be clearly delineated with white paint marks to facilitate field inspection. Contractor shall notify Engineering at 409-797-3644 for inspection ***at least 48 hours prior*** to commencing construction.	
3	4.	Once marked, Engineering will verify easement/ROW access for the City to service the storm sewer utilities and Utilities Superintendent will verify sanitary sewer and water mains access and Traffic (Assistant Director of Public Works or designee will verify traffic cables/fiber optic).	
3	5.	Approval, denial, or modified approval by Engineering Division. Proof of Liability Insurance, Shall be Obtained, with the City of Galveston as a Certificate Holder on the policy for each project, and also a **copy** of the Contractors Annual Performance Bond (Right of Way & Permit Bond Contractors Performance Bond **(Right of Way and Permit Bond)** for the Project before Final Conditional Approval is granted and the R.O.W. Construction Permit is issued. ***See COG Municipal code Sec. 31-281. - Registration and Construction Permits.***	

City of Galveston Utility Permit Sequence

Notes:

- Contractor shall take necessary precautions to protect root systems of shrubs, plants and trees http://www.cityofgalveston.org/504/Standard- Construction-Specifications.
- Contractor shall comply with the latest edition of OSHA regulations and the State of Texas laws.
- Contractor will be responsible and liable for all losses, damages and restoration of utilities and affected area to pre-construction conditions at no cost to the City and property owners.
- Contractor shall maintain a set of redline drawings and **record as-built** conditions during construction. Drawings are to be provided to the Office of the City Engineer (http://www.cityofgalveston.org/504/Standard- Construction-Specifications).
- All disturbed areas public and private (ex: at the bore pits and open cut areas) during construction including curbs, sidewalks, etc., will need to be restored to pre-construction condition and a hard copy and electronic copy of the record drawings/as-built shall be provided to the Office of the City Engineer (All City Specifications for your use are at: http://www.cityofgalveston.org/504/Standard-Construction- Specifications).
- Permit contingent on a Storm Water Pollution Prevention Control Plan (Composite Sock, Silt Fencing, etc.) to keep fill material out of the City's ROW and adjacent private property and legal easements, etc. When calling for inspections, failure may lead to a red tag.
- Temporary License to Use (TLTU) is required if the contractor will be blocking any travel lanes with equipment or trucks. Please email the TLTU to Anthony Smith at ASmith@GalvestonTX.Gov.
- Road Closure Notification Form is required for blocking travel lanes. Please email Road Closure Notification Forms to the Public Information Officer, Marissa Barnett, at MBarnett@GalvestonTX.Gov and to the Public Works User at PublicWorks@GalvestonTX.Gov no later than 48 hours prior to work beginning.
- Contractor to field verify actual location, depth, size, material and type of utilities. Utilities may include water pipes, sanitary sewer pipes (gravity and force-mains), storm sewer pipes, cables, fiber optic, electrical, gas, potentially abandoned pipelines, etc.
- There are multiple conflicts with the proposed installation. Please have contractors take caution.
- **Conditional Approval Expires 60 Days from Inception.**

Private utilities have a statutory right to occupy the City of Galveston (City) Right of Way (ROW), provided that:

1. **Maintenance of public and private utilities already present in the ROW are not impacted,**
2. **Potential damage of existing utilities during installation can be avoided through engineering controls,**
3. **Permit fees and annual lease fees are paid to the City at the time of permit application or franchise fee paid quarterly to the City, and not delinquent,**
4. **Compliance with design and construction standards and all applicable codes is evident in the permit application;**

However, the utilities rights are subordinate to the needs of the public. If utilities are located in a City ROW, they will frequently need to be relocated to allow for construction of public projects. Utility relocation when requested by the City, shall be completed promptly by the private utility owner, at no cost to the City.

By signing below, I hereby acknowledge that I have read the above information. Any questions concerning the above information are to be directed to Engineering@GalvestonTx.Gov for further clarification.

Utility Owner or Authorized Representative Signature	Title	Date
Phone Number	Email Address	
Print Name in CAPs	Name of Company	

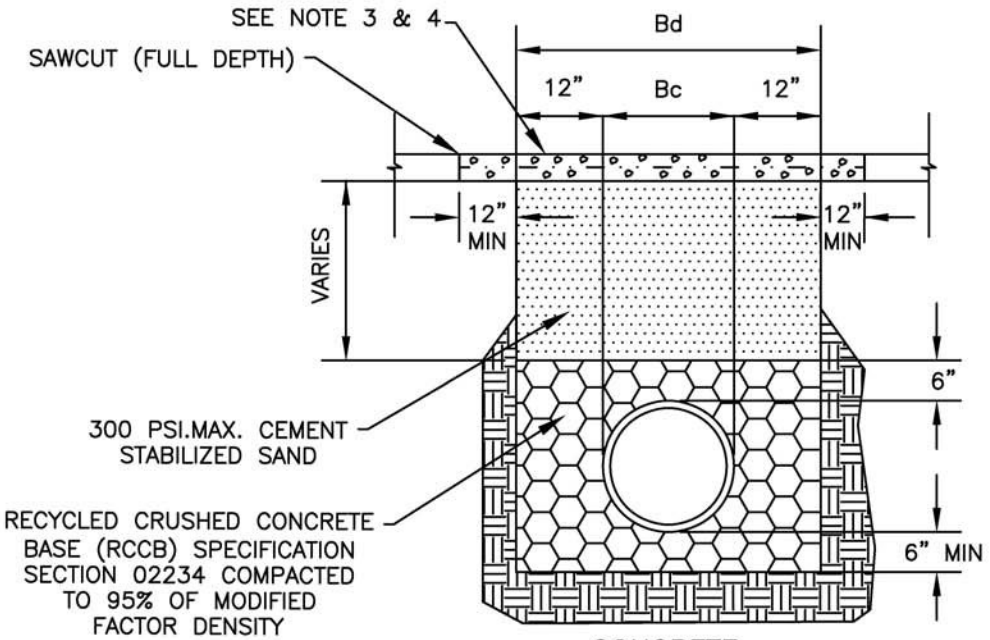

CONCRETE

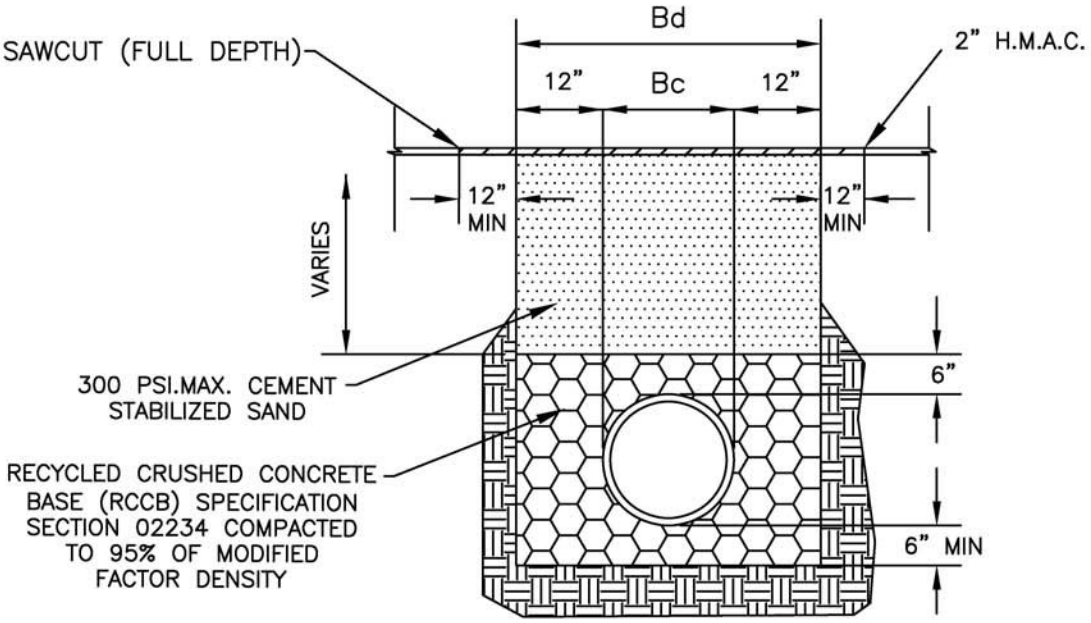

ASPHALT

GENERAL NOTES:

1. BC = OUTSIDE OF PIPE.

2. BD = TRENCH WIDTH

3. MATCH EXISTING CONCRETE PAVEMENT WITH MINIMUM 6" OF 3600 PSI, REINFORCED WITH EITHER #3 BARS @ 12" O.C.E.W. OR #4 BARS @ 18" O.C.E.W. AND DOWELED INTO EXISTING CONCRETE @ 24" O.C.

4. IF EXISTING PAVEMENT IS REINFORCED, EXISTING BARS MAY BE USED IN THE PLACE OF DOWELS.

5. COARSE CRUSHED STONE (SPEC-02231) PIPE EMBEDMENT MUST BE USED WHEN GROUND WATER IS ENCOUNTERED IN THE TRENCH.

CONCRETE/ ASPHALT PAVEMENT

UTILITY CUT REPAIR

NOT TO SCALE

APPROVED		CITY OF GALVESTON, TX ENGINEERING DIVISION SEPTEMBER, 2018
CITY ENGINEER	9/6/2018 DATE	CONCRETE/ ASPHALT PAVEMENT UTILITY CUT REPAIR

SECTION 02231

CRUSHED STONE FLEXIBLE BASE COURSE

PART 1 G E N E R A L

1.1 SECTION INCLUDES

A. Foundation course of crushed stone.

1.2 UNIT PRICES

A. Measurement for crushed stone flexible base is on a square yard basis. Separate measurement will be made for each different required thickness of base course.

1.3 SUBMITTALS

A. Submittals shall conform to requirements of all provisions and sections of these specifications.

B. Submit samples of crushed stone and soil binder for testing.

1.4 TESTS

A. Tests and analysis of soil materials will be performed in accordance with ASTM C131, ASTM D1557, ASTM D4318, Tex-101-E, and Tex-110-E under provisions of Section 01410 - Testing Laboratory Services.

1.5 DELIVERY, STORAGE, AND HANDLING

A. Stockpiles shall be made up of layers of processed aggregate materials. Load material by making successive vertical cuts through entire depth of stockpile.

PART 2 P R O D U C T S

2.1 MATERIALS

A. Crushed Stone: Material retained on the No. 40 Sieve meeting the following requirements:

1. Durable particles of crusher-run broken limestone, sandstone, or granite obtained from an approved source.

2. Los Angeles abrasion test percent of wear not to exceed 40 when tested in accordance with ASTM C131.

B. Soil Binder: Material passing the No. 40 Sieve meeting the following requirements when tested in accordance with ASTM D4318:

1. Maximum Liquid Limit: 40.

2. Maximum Plasticity Index: 12.

3. Maximum Lineal Shrinkage: 7 (when calculated from volumetric shrinkage at liquid limit).

C. Mixed Materials shall meet the following requirements:

1. Minimum compressive strength of 35 psi at 0 psi lateral pressure and 175 psi at 15 psi lateral pressure using triaxial testing procedures.

2. Grading in accordance with Tex-101-E and Tex-110-E within the following limits:

Sieve	Percent Retained
1-3/4 inch	0 to 10
No. 4	45 to 75
No. 40	60 to 85

PART 3 E X E C U T I O N

3.1 EXAMINATION

A. Verify compacted subgrade is ready to support imposed loads.

B. Verify lines and grades are correct.

3.2 PREPARATION

A. Complete backfill of new utilities below future grade.

B. Prepare subgrade in accordance with requirements of Section 02221 and Section 02225 or Sections 02241.

C. Correct subgrade deviations in excess of plus or minus 1/2 inch in cross section, or in 16 foot length by loosening, adding or removing material, reshaping and recompacting by sprinkling and rolling.

D. Prepare sufficient subgrade in advance of base course operations.

3.3 PLACEMENT

A. Spread and shape in lifts to compacted thickness not to exceed 8 inches. Complete spreading, shaping, and compacting on same day material is deposited.

B. Place base so that projecting reinforcing steel from curbs remain at approximate center of base. Secure a firm bond between reinforcement and base.

C. Start rolling operations as soon as possible after placement. Use sheepfoot, steel, or pneumatic rollers as approved. Roll longitudinally with subgrade starting from sides. Overlap successive strips by one-half width of each rear wheel.

D. Maintain moisture between optimum and 3 percent above optimum moisture.

E. Compact to 95 percent of Modified Proctor density in accordance with ASTM D1557, unless otherwise indicated on the Drawings.

F. Finish to grade and compact lift before placing successive lift.

G. Maintain shape by grading throughout operation.

H. Provide total thickness indicated on Drawings.

3.4 TOLERANCES

A. Completed surface shall be smooth and conform to typical section and established lines and grades.

B. Top surface of embankment: Plus or minus 1/4 inch in cross section, or in 16 foot length.

3.5 FIELD QUALITY CONTROL

A. Testing will be performed under provisions of Section 01410 - Testing Laboratory Services.

B. A minimum of one core will be taken at random locations per 1,000 linear feet per lane of roadway or 500 square yards of base to determine in-place depth.

C. Contractor may, at his own expense, request additional cores in the vicinity of cores indicating nonconforming in-place depths. If the average of the tests falls below the required depth, place and compact additional material at no additional cost to the Owner.

D. Compaction Testing will be performed in accordance with ASTM D1556 or ASTM D2922 and ASTM 3017 at a random location near each depth determination core. Rework and recompact areas that do not conform to compaction requirements.

E. Fill cores and density test sections with new compacted crushed stone flexible base.

3.6 PROTECTION

A. Sprinkle to prevent excessive loss of moisture.

B. Restrict construction traffic on finished base to equipment required to complete the work.

END OF SECTION

SECTION 02252

CEMENT STABILIZED SAND

PART 1 G E N E R A L

1.1 SECTION INCLUDES

A. Cement stabilized sand for backfill and bedding.

1.2 UNIT PRICES

A. No payment will be made for cement stabilized sand under this Section unless an extra unit price item is included in the Bid Proposal and the application of the pay item is approved by the Owner's Representative. Include payment for cement stabilized sand in unit price for applicable bid items.

B. If use of cement stabilized sand is allowed based on the Owner's Representative's direction the extra unit price item will be paid on a per ton basis. A conversion between volume calculated based on theoretical limits and total weight will be made based on a ratio of 1.64 tons per cubic yard.

1.3 SUBMITTALS

A. Submittals shall conform to requirements of all sections and provisions of these specifications.

B. Submit material qualification and mix design tests to include:

1. Three series of tests of sand or fine aggregate material from the proposed source. Tests shall include procedures defined in Paragraph 2.01.

2. Three moisture-density relationship tests prepared using the material qualified by the tests of Paragraph 1.03B.1. Blends of fine aggregate from crushed concrete and bank run sand shall be tested at the ratio to be used for the mix design testing.

3. Mix design report to meet the design requirements of Paragraph 1.04. The mix design shall include compressive strength tests after 48-hours and 7 days curing.

C. Submit stamped load tickets with time of loading directly after mixing.

1.4 DESIGN REQUIREMENTS

A. Design sand-cement mixture to produce a minimum unconfined compressive strength of 100 pounds per square inch in 48 hours when compacted to 95 percent in accordance with ASTM D558 and when cured in accordance with ASTM D1632, and tested in accordance with ASTM D1633. Mix for general use shall contain a minimum of 1-1/2 sacks of cement per cubic yard. Mix for use as sanitary sewer embedment within 9 feet of waterlines shall contain 2 sacks of cement per cubic yard. Compact mix with a moisture content on the dry side of optimum.

PART 2 P R O D U C T S

2.1 MATERIALS

A. Cement: Type 1 Portland cement conforming to ASTM C150.

B. Sand: Clean, durable sand meeting grading requirements for fine aggregates of ASTM C33, or requirements for Bank Run Sand of Section 02229 - Utility Backfill Materials, and the following requirements:

1. Classified as SW, SP or SM by the United Soil Classification System of ASTM D2487.

2. Deleterious materials:

a. Clay lumps, ASTM C142; less than 0.5 percent.

b. Lightweight pieces, ASTM C123; less than 5.0 percent.

c. Organic impurities, ASTM C40; color no darker than the standard color.

3. Plasticity index of 4 or less when tested in accordance with ASTM D4318.

C. Fine aggregate manufactured from crushed concrete meeting the quality requirements for crushed rock material of Section 02229 - Utility Backfill Materials, may be used as a complete or partial substitute for bank run sand. The blending ratio of fine aggregate from crushed concrete and bank run sand shall be defined in the mix design report.

D. Water: Potable water, free of oils, acids, alkalis, organic matter or other deleterious substances, meeting requirements of ASTM C94.

2.2 MIXING MATERIALS

A. Thoroughly mix sand, cement and water in proportions of the mix design using a pugmill-type mixer. The plant shall be equipped with automatic weight controls to ensure correct mix proportions.

B. Stamp batch ticket at plant with time of loading directly after mixing. Material not placed and compacted within 4 hours after mixing shall be rejected.

C. No hand mixing is allowed on site.

PART 3 E X E C U T I O N

3.1 PLACING

A. Place sand-cement mixture in 8-inch-thick loose lifts and compact to 95 percent of ASTM D558, unless otherwise specified. The moisture content during compaction shall be on the dry side of optimum but sufficient for hydration. Perform and complete compaction of sand-cement mixture within 4 hours after addition of water to mix at the plant.

B. Do not place or compact sand-cement mixture in standing or free water.

3.2 FIELD QUALITY CONTROL

A. Testing will be performed under provisions of Section 01410 - Testing Laboratory Services.

B. One sample of cement stabilized sand shall be obtained for each 150 tons of material placed per day with no less than one sample per day of production. Random samples of delivered cement stabilized sand shall be taken in the field at point of delivery in accordance with ASTM 3665. Obtain three individual samples of approximately 12 to 15 lb each from the first, middle, and last third of the truck and composite them into one sample for test purpose.

C. Prepare and mold four specimens (for each sample obtained) in accordance with ASTM D 558, Method A, without adjusting moisture content. Samples will be molded at approximately same time material is being used, but no later than 4 hours after water is added to mix.

D. After molding, specimens will be removed from molds and cured in accordance with ASTM D 1632.

E. Specimens will be tested for compressive strength in accordance with ASTM D 1633, Method A. Two specimens will be tested at 48 hours plus or minus 2 hours and two specimens will be tested at 7 days plus or minus 4 hours.

F. A strength test will be average of strengths of two specimens molded from same sample of material and tested at same age. Average daily strength will be average of strengths of all specimens molded during one day's production and tested at same age.

G. Precision and Bias: Test results shall meet recommended guideline for precision in ASTM D 1633 Section 9.

H. Reporting: Test reports shall contain, as a minimum, the following information:
1. Supplier and plant number
2. Time material was batched
3. Time material was sampled
4. Test age (exact hours)
5. Average 48-hour strength
6. Average 7-day strength
7. Specification section number
8. Indication of compliance / non-compliance
9. Mixture identification
10. Truck and ticket numbers
11. The time of molding
12. Moisture content at time of molding
13. Required strength
14. Test method designations
15. Compressive strength data as required by ASTM D 1633
16. Supplier mixture identification
17. Specimen diameter and height, in.
18. Specimen cross-sectional area, sq. in.

3.3 ACCEPTANCE

A. Strength level of material will be considered satisfactory if:
1. The average 48-hour strength is greater than 100 psi with no individual strength test below 70 psi.

2. All 7-day individual strength tests (average of two specimens) are greater than or equal to 100 psi.

B. Material will be considered deficient when 7-day individual strength test (average of two specimens) is less than 100 psi but greater than 70 psi. See Paragraph 3.04 Adjustment for Deficient Strength.

C. The material will be considered unacceptable and subject to removal and replacement at Contractor's expense when individual strength test (average of two specimens) has 7-day strength less than 70 psi.

D. When moving average of three daily 48-hour averages falls below 100 psi, discontinue shipment to project until plant is capable of producing material, which

exceeds 100 psi at 48 hours. Five 48-hour strength tests shall be made in this determination with no individual strength tests less than 100 psi.
Testing laboratory shall notify Contractor, Project Manager, and material supplier by facsimile of tests indicating results falling below specified strength requirements within 24 hours.

E. If any strength test of laboratory cured specimens falls below the specified strength, Contractor may, at his own expense, request test of cores drilled from the area in question in accordance with ASTM C42. In such cases, three (3) cores shall be taken for each strength test that falls below the values given in 3.03.A.

F. Cement stabilized sand in an area represented by core tests shall be considered satisfactory if the average of three (3) cores is equal to at least 100 psi and if no single core is less that 70 psi. Additional testing of cores extracted from locations represented by erratic core strength results will be permitted.

3.4 ADJUSTMENT FOR DEFICIENT STRENGTH

A. When mixture produces 7-day compressive strength greater than or equal to 100 psi, then material will be considered satisfactory and bid price will be paid in full.

B. When mixture produces 7-day compressive strength less than 100 psi and greater than or equal to 70 psi, material shall be accepted contingent on credit in payment. Compute credit by the following formula:

$$\text{Credit per Cubic Yard} = \frac{\$30.00 \times 2\,(100\text{ psi} - \text{actual psi})}{100}$$

C. When mixture produces 7-day compressive strength less than 70 pounds per square inch, then remove and replace cement-sand mixture and paving and other necessary work at no cost to City.

END OF SECTION

- **Sec. 31-280. - Scope.**

No person shall commence or continue with the construction, installation or operation of utilities within the right-of-way in the city except as provided by the ordinances of the city and the directives of the public works department. All construction activity in city of right-of-way will be in accordance with this chapter. To the extent covered by an existing and valid utility franchise agreement, the terms of the franchise agreement shall control over this chapter in the event of a conflict.

(Ord. No. 00-048, § 2 (part), 6-8-00)

- **Sec. 31-281. - Registration and construction permits.**

(a)

Registration. In order to protect the public health, safety and welfare, all users of the right-of-way will register with the City of Galveston. Registration and permits will be issued in the name of the person who will own the utilities. Registration must be renewed every five (5) years. For utilities with a current franchise or license, the franchise or license will be evidence of renewal. If a registration is not renewed and subject to sixty (60) day notification to the owner, the facilities of the user will be deemed to have been abandoned. When any information provided for the registration changes, the user will inform the City of Galveston of the change no more than thirty (30) days after the date the change is made. Registration shall include:

(1)

The name of the user of the right-of-way;

(2)

The name, address and telephone of people who will be contact person(s) for the user;

(3)

The name, address and telephone number of any contractor or subcontractor, if known, who will be working in the right-of-way on behalf of the user;

(4)

The name(s) and telephone number of an emergency contact who shall be available twenty-four (24) hours a day;

(5)

Proof of insurance and bonds:

a.

An applicant must provide acceptable proof of liability insurance in the total amount of six million dollars ($6,000,000.00); one million dollars ($1,000,000.00) primary plus five million dollars ($5,000,000.00) umbrella or other provisions as acceptable to the risk manager.

b.

The coverage must be on an "occurrence" basis and must include coverage for personal injury, contractual liability, premises liability, medical damages, underground, explosion and collapse hazards.

c.

Each policy must include a cancellation provision in which the insurance company is required to notify the city in writing not fewer than thirty (30) days before cancelling, failing to renew, or reducing policy limits.

d.

The applicant shall file the required original certificate of insurance prior to any commencement of work. The certificate shall state the policy number, name of the insurance company; name and address of the agent or authorized representative of the insurance company; name, address and telephone number of insured; policy expiration date; and specific coverage amounts.

e.

Applicant shall file an annual surety bond which will be valid each year construction will occur through one (1) full year after the completion of the construction from a surety company authorized to do business in the State of Texas in the amount of the estimated amount of the cost to restore the right-of-way for the work anticipated to be done in that year, in the event the applicant leaves a job site in the right-of-way unfinished, incomplete or unsafe.

f.

The above requirements may be met by utilities with a current franchise or license if their current franchise or license adequately provides for insurance or bonds or provides an indemnity in favor of the city.

(b)

Construction permits.

(1)

No person shall perform any construction or installation of facilities in the right-of-way without first obtaining a construction permit, except as provided herein. The permit will be in the name of the person who will own the facilities to be constructed. The permit must be completed and signed by a representative of the owner of the facilities to be constructed.

a.

Emergency responses related to existing facilities may be undertaken without first obtaining a permit; however the public works department should be notified in writing within two (2) business days of any construction related to an emergency response; including a reasonably detailed description of the work performed in the right-of-way and an updated map of any facilities that were relocated, if applicable.

b.

The phrase "construction or installation of facilities" does not include the installation of facilities necessary to initiate service to a customer's property, or repair or maintenance of existing facilities unless such repair or maintenance requires the breaking of pavement, the closure of a nonresidential traffic lane; excavation or boring.

(2)

The permit shall state to whom it is issued, location of work, location of facilities, dates and times work is to take place and any other condition set out by the city engineer.

(3)

The person requesting a permit will provide the city engineer with documentation in the format specified by the public works department describing:

a.

The proposed, approximate location and route of all facilities to be constructed or installed and the applicant's plan for the right-of-way construction;

b.

Engineering plans which will be on scale of one (1) inch equals fifty (50) feet unless otherwise approved by the city engineer;

c.

Detail of the location of all right-of-way and utility easements which applicant plans to use;

d. Detail of all existing city utilities in relationship to applicant's proposed route;

e. Detail of what applicant proposes to install, such as pipe size, number of interducts, valves, etc.;

f. Detail of plans to remove and replace asphalt or concrete in streets (include City of Galveston standard construction details);

g. Drawing of any bores, trenches, handholes, manholes, switch gear, transformers, pedestals, etc., including depth located in public right-of-way;

h. Handhole and/or manhole typical of type of manholes and/or handholes applicant plans to use or access;

i. Traffic control plan for any construction in the street pavement or which otherwise affects traffic. Traffic control plan shall be in full conformance with the Manual of Uniform Traffic Control Devices;

j. Complete legend of drawings submitted by applicant;

k. Five (5) sets of engineering plans must be submitted with permit application;

l. The name, address and phone numbers of the contractor or subcontractor who will perform the actual construction, including the name and telephone number of an individual with the contractor who will be available at all times during construction. Such information shall be required prior to the commencement of any work;

m. The construction and installation methods to be employed for the protection of existing structures, fixtures, and facilities within or adjacent to the right-of-way, and dates and times work will occur, all of which (methods, dates, times, etc.) are subject to approval of the city engineer;

n. A statement that the insurance requirements are met.

(4) All construction and installation in the right-of-way shall be in accordance with the permit for the facilities. The city engineer shall be provided access to the work and to such further information as he or she may reasonable require to ensure compliance with the permit.

(5) A copy of the construction permit and approved engineering plans shall be maintained at the construction site and made available for inspection by the city engineer at all times when construction or installation work is occurring.

(6) All construction or installation work authorized by permit must be completed in the time specified in the construction permit. If the work cannot be completed in the specified time periods, the permittee may request an extension from the city engineer, who will use his best efforts to approve or disapprove a request for permit as soon as possible.

(7)

A copy of any permit or approval issued by federal or state authorities for work in federal or state fight-of-way located in the City of Galveston if requested by the city engineer.

(8)

A request for a permit must be submitted at least ten (10) working days before the proposed commencement for work in the request, unless waived by the city engineer.

(9)

Requests for permits will be approved or disapproved by the city engineer within a reasonable time of receiving all the necessary information. City engineer will use his/her best efforts to approve or disapprove a request for permit as soon as possible.

(10)

The city engineer or the applicant may request a pre-construction meeting with the permittee and their construction contractor.

(11)

Permit applications are required for construction of new, replacement, or upgrading of the company's facilities in the right-of-way either aerial or underground.

(Ord. No. 00-048, § 2 (part), 6-8-00)

- **Sec. 31-282 - Construction standards.**

(a)

Department of public works must be notified twenty-four (24) hours in advance that construction is ready to proceed by either the right-of-way user, or his/her contractor or representative. All utility owners shall be notified at least twenty-four (24) hours in advance of the start of construction.

(b)

All construction shall be in conformance with all city codes and applicable local, state and federal laws.

(c)

Three by three (3 × 3) feet information signs stating the identity of the person doing the work, telephone number and permittee's identity and telephone number shall be placed at the location where construction is to occur forty-eight (48) hours prior to the beginning of work in the right-of-way and shall continue to be posted at the location during the entire time the work is occurring. An information sign will be posted on public right-of-way one hundred (100) feet before the construction location commences and each one hundred (100) feet thereafter, unless other posting arrangements are approved or required by the city engineer.

(d)

Erosion control measures (e.g., silt fence) and advance warning signs, marker, cones and barricades must be in place before work begins. Where construction requires a street cut or lane closure, traffic control shall be in accordance with the approved traffic control plan and the Manual of Uniform Traffic Control Devices.

(e)

Lane closure on major thoroughfares will be limited after 8:30 a.m. and before 4:00 p.m. unless the city traffic engineer grants prior approval. Arrow boards will be required on lane closures, with all barricades, advanced warning signs and thirty-six (36) inch reflector cones placed according to the specifications of the public works department.

(f)

Permittees are responsible for the workmanship and any damages by a contractor or subcontractor. A responsible representative of the permittee will be available to public works at all times during construction.

(g)

Permittee shall be responsible for stormwater management erosion control that complies with city, state and federal guidelines. Requirements shall include, but not be limited to, silt fencing around any excavation that will be left overnight, silt fencing in erosion areas until reasonable vegetation is established, barricade fencing around open holes, and high erosion areas will require wire backed silt fencing. Upon request, permittee may be required to furnish documentation submitted or received from federal or state government.

(h)

Permittee or contractor or subcontractor will notify the public works department immediately of any damage to other utilities, either city or privately owned.

(i)

It is the city's policy not to cut streets or sidewalks: however, when a street or sidewalk cut is required, prior approval must be obtained by the public works department and all requirements of the public works department shall be followed. Repair of all street and sidewalk removals must be made promptly to avoid safety hazards to vehicle and pedestrian traffic.

(j)

Installation of facilities must not interfere with city utilities, in particular gravity dependent facilities.

(k)

New facilities must be installed to a depth approved by the city engineer.

(l)

All directional boring shall have locator place bore marks and depths while bore is in progress.

(m)

The working hours in the right-of-ways are 7:00 a.m. to 6:00 p.m., Monday through Friday. Work that needs to be performed after 6:00 p.m. Monday through Friday must be approved in advance. Any work performed on Saturday must be approved twenty-four (24) hours in advanced by the public works department. Directional boring is permitted only Monday through Friday 7:00 a.m. to 6:00 p.m., unless approved in advance. No work will be done, except for emergencies, on city holidays.

(n)

People working in the right-of-way are responsible for obtaining line locates from all affected utilities or others with facilities in the right-of-way prior to any excavation.

(o)

Permittee will be responsible for verifying the location, both horizontal and vertical, of all facilities. When required by public works, permittee shall verity locations by pot holing, hand digging or other method approved by the public works department prior to any excavation or boring.

(p)

Placement of all manholes and/or hand holes must be approved in advance by public works department. Handholes or manholes will not be located in sidewalks, unless approved by the city engineer.

(q)

Locate flags shall not bc removed from location while facilities are being constructed.

(r)

Construction which requires pumping of water or mud shall be contained in accordance with City of Galveston ordinances and federal and state law and the directives of the public works department.

(Ord. No. 00-048, § 2 (part), 6-8-00)